U. S. Department of Agriculture
Forest Service Research Paper SO-88

A Sawmill Manager Adapts To Change With Linear Programming

George F. Dutrow

and

James E. Granskog

Southern Forest Experiment Station
Forest Service
U. S. Department of Agriculture

1973

A SAWMILL MANAGER ADAPTS TO CHANGE WITH LINEAR PROGRAMMING

George F. Dutrow and James E. Granskog

Linear programming provides guidelines for increasing sawmill capacity and flexibility and for determining stumpage-purchasing strategy. The operator of a medium-sized sawmill implemented improvements suggested by linear programming analysis; results indicate a 45 percent increase in revenue and a 36 percent hike in volume processed.

Additional keywords: Simulation, stumpage strategy, sawmill revenue, sawmill costs.

Independent sawmill owners have had to increase efficiency to survive. Now competition from new plywood plants and emerging processing complexes, rising labor costs, and growing environmental concerns demand continued improvements. Linear programming is an analytical technique helpful in meeting this challenge.

This paper shows how one independent operator prepared for the future. He travelled extensively to observe conditions and practices at mills that had installed improved equipment. Although he could eliminate some alternatives as inappropriate, he felt the need for formal analysis of those that appeared promising.

He was familiar with earlier research showing the value of linear programming for large sawmills (Row et al., 1965; McKillop and Hoyer-Nielsen, 1968; Sampson, 1972). Linear programming helped this independent operator expand his mill, evaluate potential revenues, and formulate stumpage strategies.

Operational Framework

Management must clearly define the constraints imposed by the mill and its operational environment. In this case, the sawmill is of medium size and processes mainly loblolly pine. Logs are supplied by contractors harvesting stumpage purchased on the open

market by the company. Principal equipment includes a circular headsaw, a sash gangsaw, and a vertical resaw. The firm also has dry-kiln and finishing operations. Roughly 90 percent of the lumber output is 2-inch dimension. Residual material is chipped and sold to pulpmills.

The prevailing market, the geographical location of the mill, and the nature of the timber species limited production methods and possibilities for change. Market conditions favor maximum output of dimension lumber, and in this portion of the loblolly pine belt logs are sweepy. The canter-chipper, a profitable alternative in other southern locations, cannot make the most lumber from such timber.

Other limiting factors are the amount and quality of stumpage that can be purchased annually and the amount of capital that management is willing to risk in modifying a plant without a land base. Management must also evaluate additional requirements for working capital in the form of logs and lumber since these requirements can exceed the total value of the plant.

In light of these objectives and constraints, several stages of research were conducted. First, the mill was divided into major processing units, and productivity rates for each unit determined. Second, individual logs were measured before and after processing to correlate log size and values of final products. Third, a linear program model of the mill was constructed to provide current revenues and pinpoint machine limitations prohibiting increased log flow. Fourth, recommended changes were simulated under varying log input distributions to evaluate their effects. Finally, strategies for stumpage purchases were derived.

Data Collection

To gather information for the linear program, primary sawing operations were observed and time and yield studies conducted.

Mill layout is illustrated in figure 1. Tree-length timber is delivered to the log deck by forklifts. A conveyor feeds the raw material to a circular cutoff saw and then to a cambium-shear debarker. Logs are processed on two sides by the headrig chipper and circular saw; the cants are then conveyed to the sashgang which is set to cut 2-inch dimension exclusively. When the gangsaw is down or its capacity exceeded, the headrig saws boards and timbers. Slabs from the gang are sent through a vertical resaw and the resulting lumber plus other waney material from the gang or carriage is passed through the edger. Residual materials are chipped.

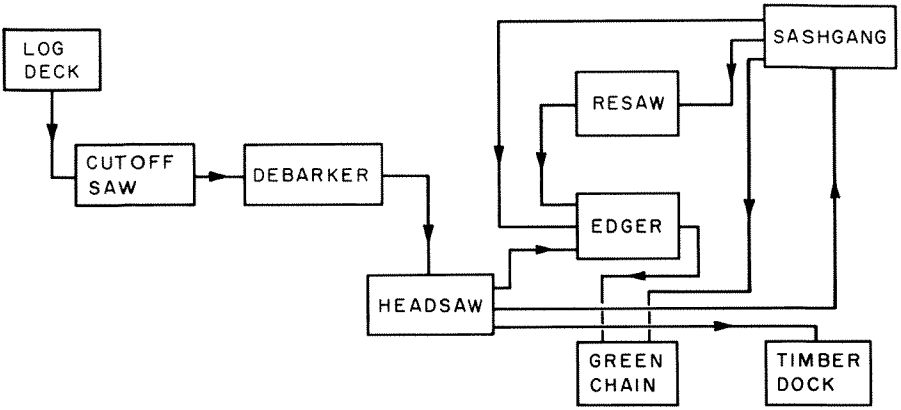

Figure 1.—*Original mill layout.*

Time Study

Machine rates were recorded to obtain equations for estimating processing requirements. Only the debarker, headrig, and gangsaw were timed since the resaw and edger units were obviously used far below their capacities.

Debarker.—The debarker and cutoff saw were treated as one unit. A batch of logs was clocked from the time the lead end of the first log reached a selected point until the log following the batch reached the same point. Batches consisted of one to three logs: diameter and length of each log were measured. The equation for estimating the time requirements of the debarker-cutoff unit is

$$Y = 7.71337 + 0.40132(L) + 11.09202(N)$$
$$R^2 = .57 \quad SE = 6.759$$

where

Y = processing time per batch (in seconds)
L = sum of length of logs (in feet)
N = number of logs in batch.

Headrig.—Processing on the headrig was measured from the time the first log of a batch hit the carriage until the first log following the batch touched the carriage. Batches ranged from two to five logs; diameter, length, and the number of cuts per log were recorded. The equation for estimating the time requirements of the headrig is

$$Y = -35.94915 + 1.10274\ (L) + 5.28405(P) + 0.15390(D^2/N)$$
$$R^2 = .78 \qquad SE = 18.038$$

where

Y = processing time per batch (in seconds)
L = sum of length of logs (in feet)
P = total number of cuts on the carriage
D = sum of the diameters (in inches)
N = number of logs in batch.

The processing time per log can be obtained by dividing the estimated time per batch by the number of logs in the batch.

Sashgang.—Cants were timed through the gangsaw, beginning as the selected cant touched the infeed roller and ending when the following cant reached the same point. Cant thickness, width, and length were measured. The equation for estimating time requirements of the gangsaw is

$$Y = -10.31693 + 3.02561(L) + 1.83179(CT) - 0.25699(LD) + 0.01171(D^2L)$$

$$R^2 = .83 \qquad SE = 3.846$$

where

Y = processing time per cant (in seconds)
L = length of cant (in feet)
CT = cant thickness (in inches)
D = sum of diameters (in inches).

Since timing excluded stoppages, the equations represent the capacity of the respective machines. These equations were used to estimate processing times per thousand board feet of log input by diameter class and length for the log distributions used in the linear programming analysis.

Yield Study

Yields were determined for 81 logs ranging from 6 to 18 inches diameter inside bark and 12 to 20 feet long. Logs were sawn individually; volume and weight yields were recorded for each log. Boards and dimensions were tallied by width, thickness, length, and grade by a representative of the Southern Pine Inspection Bureau. Logs were weighed with and without bark, and all lumber and chippable material were weighed. Bark and sawdust weights were obtained by subtraction.

Logs were sawn to obtain the greatest possible volume of dimension lumber as this sawing pattern provides maximum output for the mills selected market.

Analysis of the yield data provided finalized regression equations for estimating weights, lumber volume, and total dollar value obtainable from a log (table 1). The products from each log were multiplied

by their current market prices, and the summed values supplied data for the dollar value equation.

Table 1.—*The yields*

	Equations	R^2	SE
Log weight (total lbs.)	$= 278.90935 - 39.64487(D) + 0.49885(D^2L)$ [1]	.97	96.581
Bark weight (lbs.)	$= -31.49903 + 0.52717(DL)$	.71	18.976
Sawdust weight (lbs.)	$= -65.83602 + 1.20237(DL)$	.76	38.214
Chip weight (lbs.)	$= -20.39227 + 1.01738(DL)$	.72	35.334
Lumber volume (M b.f.)	$= -0.01002 + 0.00332(L) - 0.00062(DL) + 0.00008(D^2L)$	.97	0.0122
Dollar value	$= 11.56702 - 1.40689(D) - .08191(DL) + .01633(D^2L)$	.97	2.232

[1] D = diameter in inches
L = length in feet

The Model

Linear programming is a mathematical technique for selecting the optimum level of production. The program consists of a mathematical expression of goals (objective function) and of limitations (constraints). The goal here was to maximize revenue received from sale of products. Machine rates and input volumes were the major constraints.

The linear program was formulated for a competitive firm since the mill is unable to control prices of inputs bought or products sold. Thus, with a goal of higher revenue, the only variables of choice were rates of consumption and production. Specifically, these variables included timber purchases, yields from different sawing patterns, and time availability on mill equipment.

Observations of log input, machine time, and yields were combined with product prices to formulate input-output relationships. The linear program was designed to maximize these revenue relationships in the objective function.

Table 2 presents the value coefficients for each log class when sawn or when sold as pulpwood or veneer bolts instead of being processed. These values were derived by converting lumber-scale output to Doyle-rule log input. Each revenue is net of $100/M b.f. for the delivered timber.

The amount of time required to process a thousand board feet through the debarker, headrig, and gangsaw is given in table 3.

Table 2.—*Revenue values*[1] *for log classes—per M b.f. Doyle*

Diameter and length (inches and feet)	Revenue from dimension, boards, and chips	Revenue from pulpwood or veneer bolt sales
6 x 12	$256.67	—$30 (pulpwood)
8 x 12	315.83	— 10 (pulpwood)
10 x 12	168.89	20 (veneer)
12 x 12	131.46	20 (veneer)
14 x 12	120.27	30 (veneer)
6 x 14	220.00	— 30 (pulpwood)
8 x 14	312.14	— 10 (pulpwood)
10 x 14	177.81	20 (veneer)
12 x 14	147.14	20 (veneer)
14 x 14	134.43	30 (veneer)
6 x 16	191.88	— 30 (pulpwood)
8 x 16	309.38	— 10 (pulpwood)
10 x 16	192.22	20 (veneer)
12 x 16	159.06	20 (veneer)
14 x 16	147.30	30 (veneer)
16 x 16	142.92	30 (veneer)
10 x 18	196.34	20 (veneer)
12 x 18	168.33	20 (veneer)
14 x 18	157.50	30 (veneer)
16 x 18	151.36	30 (veneer)
10 x 20	206.22	20 (veneer)
12 x 20	175.75	20 (veneer)
14 x 20	163.60	30 (veneer)
16 x 20	158.11	30 (veneer)

[1] Net of delivered timber: $100/M b.f. Doyle.

Table 3.—*Time needed to process 1 M b.f. Doyle, by log class*

Diameter and length (inches and feet)	By debarker	By headrig	By gangsaw
	Minutes		
6 x 12	27.5	17.2	27.6
8 x 12	27.5	17.9	24.4
10 x 12	12.2	8.3	12.5
12 x 12	6.9	5.0	8.3
14 x 12	4.4	3.4	6.4
6 x 14	24.5	17.4	28.2
8 x 14	24.5	18.0	25.1
10 x 14	10.7	8.2	12.2
12 x 14	6.1	4.9	8.1
14 x 14	3.9	3.3	6.1
6 x 16	22.3	17.5	28.6
8 x 16	22.3	18.0	25.5
10 x 16	9.9	8.3	12.4
12 x 16	5.6	4.9	7.9
14 x 16	3.6	3.3	5.9
16 x 16	2.5	2.4	4.9
10 x 18	9.0	8.2	12.2
12 x 18	5.1	4.8	7.8
14 x 18	3.3	3.2	5.8
16 x 18	2.3	2.3	4.7
10 x 20	8.5	8.3	12.3
12 x 20	4.8	4.8	7.7
14 x 20	3.1	3.2	5.7
16 x 20	2.1	2.3	4.6

Maintenance-free operation time was calculated to be 55 minutes per hour for the headrig and gangsaw, and 57 minutes for the debarker. These processing and maintenance times served as constraints.

The final requirement was an estimate of the volume of each log class processed in an operating hour. These volumes were based on samples of incoming logs. The normal input distribution represents an hourly total of 6.023 M b.f. (table 4).

Tables 2, 3, and 4 provided the necessary data for optimizing hourly revenue with maintenance time, processing time, and volume constraints. Input volume was selected to just exceed the mill capacity, thus forcing the solutions to indicate which log classes should be sold rather than sawn and also which machines prohibited greater output.

Table 4.—
Normal log input pattern, by size class

Diameter and length (inches and feet)	M b.f. per hour
6 x 12	0.120
8 x 12	.120
10 x 12	.135
12 x 12	.125
14 x 12	.128
6 x 14	.210
8 x 14	.224
10 x 14	.224
12 x 14	.240
14 x 14	.194
6 x 16	.336
8 x 16	.264
10 x 16	.324
12 x 16	.320
14 x 16	.400
16 x 16	.288
10 x 18	.164
12 x 18	.432
14 x 18	.224
16 x 18	.486
10 x 20	.180
12 x 20	.400
14 x 20	.125
16 x 20	.360

Simulations

Mill Modifications

Initial linear programming solutions indicated an hourly revenue of $972.18 and marked the gangsaw as the obstacle to greater returns. When gangsaw capacity was exhausted, almost 20 minutes of unused capacity remained on the headrig and some 14 minutes on the debarker.

Simulated production with an additional gangsaw pointed to higher revenues and expanded output. Hourly revenues rose by about 31 percent to $1,279.05, and volume increased almost 13 percent to 7.4 M b.f. Unused capacity remained on the gangsaws and headrig, but now the debarker became the limiting machine. Two alternatives were considered. The mill could add another cutoff saw and debarker complex or move the cutoff saw off line. The first alternative was rejected since it would require costly mill modifications. Reevaluation of the debarker complex showed that moving the cutoff saw off line would increase debarker capacity by about 10 percent.

The adjusted debarker arrangement was analyzed in a third simulation. Revenue increased to $1,414.90 per operational hour while processed volume rose to 8.229 M b.f. Relative increases were 11 percent for revenue and slightly less for log volume.

Of course, these gains in revenue cannot be viewed as increments to net profit. The cost of the second gangsaw, including additional labor to operate it, has to be deducted from revenue increases. Capacity and production boosts require substantial working capital for increased log supplies at the millyard and for additional stumpage purchases. Management weighed revenue gains against the added costs and made the suggested changes.

Certain log classes were sold by the model as pulpwood. An operational rule of thumb emerged: sell the long, small diameter logs rather than process them if mill capacity can be met by other log classes. Most of the 6-inch diameter logs were rejected by the linear-program solution as being unprofitable, even though the Doyle log rule permits a large overrun in small log classes.

Sawing Pattern Option

Although market considerations and managerial choice precluded detailed analyses of alternative sawing patterns, the option of cutting only 2 × 4's from butt logs was simulated. This option decreased revenues and absorbed more machine time; therefore, it was not a viable alternative.

Stumpage Guides

Stumpage-purchasing strategies can be derived from linear programs which calculate ranges of acceptability for the value coefficients in the objective function. Of primary interest is the low side of these ranges, i.e., the revenue value below which a given log class will be excluded from the optimal solution. Accordingly, those log classes most sensitive to falling prices are pinpointed.

Table 5 indicates the percentage decrease in prices which would make selling a log class as pulpwood or as veneer bolts more profitable than sawing it. For example, a 2 percent decrease in lumber prices would cause 6″ × 12′ logs to be sold as pulpwood; hence, the stumpage purchaser faces a very narrow price margin within which he can profitably buy small timber. On the other hand, a stand composed of larger trees provides substantially greater insulation from profit-eroding prices declines. Logs in the 12″ × 16′ class can absorb a 48 percent decline in market prices before sales to veneer plants become more profitable. Obviously, stumpage buyers can bid higher for stands of larger trees.

Table 5.—
Product value declines per M b.f. that delete a log class from being sawn in the optimal solution

Diameter and length (inches and feet)	Allowable value declines
	Percent
6 x 12	2
8 x 12	14
10 x 12	26
12 x 12	27
14 x 12	42
6 x 14	3
8 x 14	23
10 x 14	39
12 x 14	41
14 x 14	52
8 x 16	30
10 x 16	46
12 x 16	48
14 x 16	58
16 x 16	65
10 x 18	53
12 x 18	54
14 x 18	63
16 x 18	68
10 x 20	58
12 x 20	58
14 x 20	65
16 x 20	71

The question of how great a premium can be paid for bigger trees was answered by simulating different log input patterns. The comparison assumed that the purchaser can choose between tracts of relatively small-sized timber and stands of larger trees. His choice necessarily would be conditioned by comparative profitability and stumpage price. Our task was to determine how much revenue difference would occur and how much of a stumpage price differential could be justified.

The hypothetical log distributions in table 6 provided significantly different revenue values. A small-log volume of 4.957 M b.f. yielded an hourly revenue of $956.33; with larger logs, 11.902 M b.f. furnished $1,886.62. Comparing these volumes and values with existing ones at the mill indicates how much more or less could be paid for stumpage. At present, the normal log input for the modified mill is about 8.2 M b.f. per hour and yields $1,415 in revenue. Since operating costs are virtually the same for all three log distributions, direct comparisons are possible. If only small logs are purchased, a cost reduction of $90/M b.f., or a net savings of approximately $450 per operating hour, would be required for small-log revenue to equal existing revenues. The current delivered-stumpage price of $100/M b.f. would have to fall to $10 before the mill could profitably purchase these small-sized stands. Such a price is, of course, extremely unlikely. On the other hand, a premium of $40/M b.f. can be paid for the larger log input pattern before net revenue falls below current levels.

These log input patterns are only two of infinite possibilities. Also, the prices and the price blend are relevant to but one point in time. These considerations limit the general applicability of the results. The technique, however, enables the mill manager to

Table 6.—*Alternative log class input patterns*

Diameter and length (inches and feet)	Small logs	Large logs
	---- *M* b.f. ----	
6 x 12	0.134	0.036
8 x 12	.240	.048
10 x 12	.335	.270
12 x 12	.178	.528
14 x 12	.038	.300
6 x 14	.332	.042
8 x 14	.330	.056
10 x 14	.397	.384
12 x 14	.246	.840
14 x 14	.062	.528
6 x 16	.440	.048
8 x 16	.445	.080
10 x 16	.565	.648
12 x 16	.237	1.216
14 x 16	.090	.900
16 x 16	.000	.720
10 x 18	.287	.410
12 x 18	.108	.792
14 x 18	.056	.784
16 x 18	.000	.972
10 x 20	.292	.360
12 x 20	.120	.720
14 x 20	.025	.500
16 x 20	.000	.720
	Σ =4.957 M b.f.	Σ = 11.902

analyze timber cruise data and determine how high he can bid for the tract.

Conclusions

Linear programming provided practical solutions to the problems of a medium-sized sawmill. Guided by the analysis, management installed a second gangsaw, realigned the cutoff saw, and sold small logs as pulpwood. Results indicated a 45 percent revenue increase and a 36 percent hike in volume processed. Log classes highly sensitive to price changes were specified, and a stumpage-purchasing strategy was formulated.

Further benefits are derived from added machine capacity and the stumpage strategy. Increased production is attained without overtime costs. Previously, gangsaw breakdown caused the mill to shut down; now one gangsaw can continue operation while the other

is being repaired. Management can reevaluate purchasing strategies as the stumpage market changes. In fact, the current practice of oversupplying the mill and selling marginal logs provides for nearly automatic response to change.

Although this analysis applies only to one sawmill, linear programming does have general applicability. Other independent lumbermen can similarly review their circumstances and evaluate their opportunities. With linear programming they can also plan inventory levels and determine optimum sawing patterns. In any case, the technique is an important addition to the manager's survival kit.

Literature Cited

McKillop, W., and Hoyer-Nielsen, S.
1968. Planning sawmill production and inventories using linear programming. For. Prod. J. 18(5): 83-88.

Row, C., Fasick, C., and Guttenberg, S.
1965. Improving sawmill profits through operations research. USDA For. Serv. Res. Pap. SO-20, 26 p. South. For. Exp. Stn., New Orleans, La.

Sampson, G. R.
1972. Determining maximum stumpage values for wood products mills with alternative processes. For. Prod. J. 22(8): 26-30.

Dutrow, George F., and Granskog, James E.

1973. A sawmill manager adapts to change with linear programming. South. For. Exp. Stn., New Orleans, La. 11 p. (USDA For. Serv. Res. Pap. SO-88)

Linear programming provides guidelines for increasing sawmill capacity and flexibility and for determining stumpage-purchasing strategy. The operator of a medium-sized sawmill implemented improvements suggested by linear programming analysis; results indicate a 45 percent increase in revenue and a 36 percent hike in volume processed.

Additional keywords: Simulation, stumpage strategy, sawmill revenue, sawmill costs.