USDA Forest Service
Research Paper SE-53

October
1969

Spacing and Slash Pine Quality Timber Production

Southeastern Forest Experiment Station
Asheville, North Carolina
Forest Service - U.S. Department of Agriculture

by
Frank A.
Bennett

SPACING AND SLASH PINE QUALITY TIMBER PRODUCTION

by

Frank A. Bennett
Principal Silviculturist
Naval Stores and Timber Production Laboratory
Olustee, Florida

Cubic volume production as related to spacing in planted slash pine *(Pinus elliottii* var. *elliottii)* is well understood. Yield increases as number of surviving trees per acre increases, although at a diminishing rate after a certain point. It is also well known that wider spacings, 200 to 400 trees per acre, are necessary for optimum sawtimber yields at 25 to 30 years of age. However, many foresters question the value of open spacings for sawtimber and veneer stock production because of the wide annual rings and the lack of self-pruning. They believe a narrow spacing is necessary to produce lumber that meets the "dense" classification. Southern Pine Inspection Bureau (SPIB) (1968) specifies that dense lumber "averages on either one end or the other not less than 6 annual rings per inch and not less than 1/3 summerwood, ... Pieces averaging less than 6 annual rings per inch and not less than 4 meet dense requirements if averaging 1/2 or more summerwood."

No published report compares dense lumber production with spacing of planted slash pine. This paper makes such a comparison through the use of data from a slash pine spacing study on the George Walton Experimental Forest, Dooly County, Georgia.

THE STUDY

Eight spacings, replicated twice, were established in January 1952 in a field which had been cultivated the previous year. Beginning in 1952, heights have been measured annually; starting in 1955, at the end of the fourth growing season, diameter at breast height (d.b.h.) has been measured annually for each spacing on the interior half of 3/4-acre plots (table 1). Details of growth and development through age 12 have been reported by Harms and Collins (1965).

Rings per Inch

For grading purposes, number of rings per inch can be established by diagraming the mean diameters in table 1 (fig. 1). These diagrams illustrate that even the 6 by 6 spacing produces a tree with a wide-ringed core. Eliminating this wide-ringed core would require an extremely close spacing, with precommercial thinning at an early age to avoid the adverse effects of stand density on diameter and height growth (Collins 1967).

The innermost growth ring in the diagrams of figure 1 represents the mean diameter at age 4. Because all the spacings averaged about 3 feet in height at age 2 and about 6 feet at age 3, there is an annual ring (not indicated) in this core which represents only a portion of a year's growth. For example, half the third year's height growth was spent in reaching the 4.5 foot-level, so only a portion of a year's diameter growth could be put on at that level.

Table 1.—Inside-bark diameters at various ages[1]

Age (years)	Spacing (feet)							
	6 by 6	6 by 8	5 by 10	8 by 8	6 by 12	10 by 10	7-1/2 by 15	15 by 15
	Inches							
4	0.83	0.74	0.73	0.67	0.75	0.95	0.86	0.88
5	1.69	1.91	1.90	1.78	1.89	2.12	2.02	2.20
6	2.15	2.51	2.48	2.62	2.71	2.95	2.83	3.04
7	2.53	3.04	3.09	3.14	3.17	3.50	3.48	3.74
8	2.89	3.38	3.27	3.50	3.61	3.97	4.00	4.36
9	3.16	3.68	3.51	3.81	3.99	4.39	4.42	4.95
10	3.33	3.89	3.73	4.10	4.28	4.78	4.79	5.47
11	3.48	4.06	3.88	4.37	4.51	5.14	5.05	5.94
12	3.62	4.26	4.11	4.56	4.77	5.39	5.41	6.35
13	3.70	4.42	4.26	4.72	4.92	5.60	5.62	6.73
14	3.89	4.66	4.44	4.92	5.10	5.85	5.87	7.10
15	3.96	4.69	4.54	5.03	5.23	6.02	6.03	7.35

[1] Inside bark diameters were determined by deducting double bark thickness = 0.467 + 0.107857 (d.b.h.).

When the annual diameter-growth rate of any tree is permanently reduced to 0.33 inch or lower, all wood produced thereafter will qualify as dense on the basis of the most restrictive ring count per inch. SPIB (1968) specifications for determining ring count read as follows:

> Average annual rings per inch and percentages of summerwood as required in Dense and Longleaf shall be determined by measurement over the specified portion of a radial line extending from the pith. (a) In pieces that contain the pith, the measurement shall be over the third, fourth and fifth inches from the pith if the radial line is 5-inches long or more; over the third and fourth inches from the pith if the radial line is less than 5-inches long and not less than 4″; over the third inch from the pith if the radial line is less than 4-inches long and not less than 3″; and over the farthest inch from the pith if the radial line is less than 3-inches long. (b) In pieces that do not contain the pith, the radial line shall start at the point on the edge nearest the pith and the measurement shall be over the three-inch portion of the radial line farthest from the pith if the radial line is 5″ long or more; over the two-inch portion farthest from the pith if the radial line is less than 5-inches long and not less than 4″; over the one-inch portion farthest from the pith if the radial line is less than 4-inches long and not less than 3″; and over the farthest inch from the pith if the radial line is less than 3-inches long. (c) The measurement shall be made over a 1/2-inch portion of the radial line in any case where a 1-inch portion is not available.

For a timber containing the pith and at least a 3-inch radial line, width of annual rings within the 4-inch core is of no particular importance. The width of these rings might be important either when the timber does not contain the pith or when radial lines are less than 3 inches or both.

All spacings except the 15 by 15 have reached the 0.33-inch growth level by age 13 (table 2); in fact, the four closest spacings are at this point by age 9. These growth rates were established by subtracting the mean diameter at each age from the mean diameter the next year. Fluctuations in growth rate within a spacing can be primarily attributed to year effect.

Since the growth rate after age 13 of the 7-1/2 by 15 spacing meets dense requirement for number of rings per inch, we can assume any mean d.b.h. (such as 12 inches) and evaluate the production of dense material for the average tree of this spacing (fig. 2). Dimension material and/or timbers that qualify as dense on the basis of ring count per inch at d.b.h. can be sawed from a tree this age and size. Either a 4x10, a 6x10, a 6x8, a 4x1, a 6x6, or a 4x4 timber, plus several 2-inch dimension pieces with each, that would meet the 6-rings-per-inch specification, could be sawed from this tree; or one

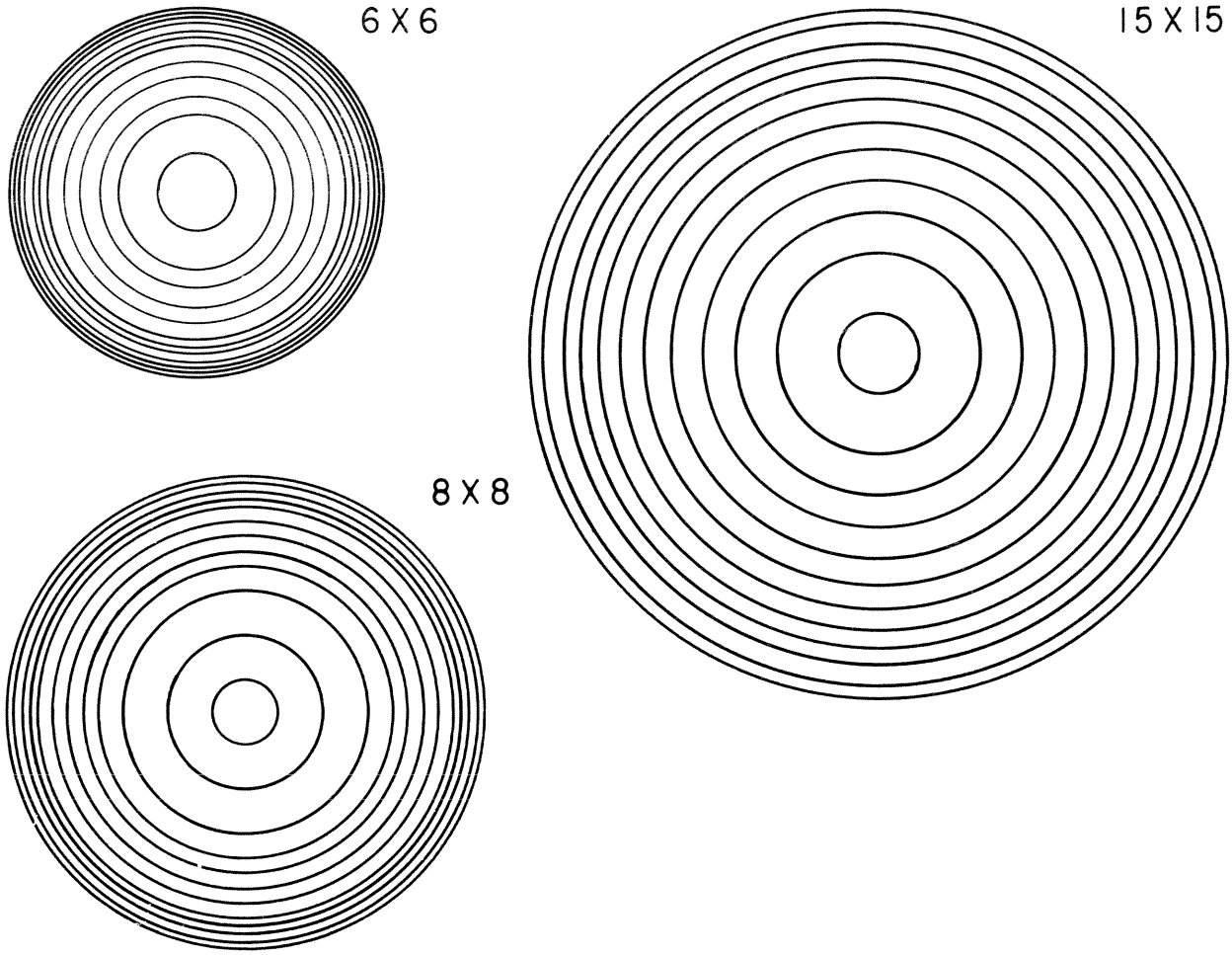

Figure 1.—Growth patterns, through age 15, for the average tree of the 6 by 6, 8 by 8, and 15 by 15 spacings. Scale 1/2:1 inch.

Table 2.—Annual diameter growth rates (inside bark) by spacing[1]

Age (years)	Spacing (feet)							
	6 by 6	6 by 8	5 by 10	8 by 8	6 by 12	10 by 10	7-1/2 by 15	15 by 15
	Inches							
5	0.86	1.17	1.17	1.11	1.14	1.17	1.16	1.32
6	0.46	0.60	0.58	0.84	0.82	0.83	0.81	0.84
7	0.38	0.53	0.61	0.52	0.46	0.55	0.65	0.70
8	0.36	0.34	0.18	0.36	0.44	0.47	0.52	0.62
9	0.27	0.30	0.24	0.31	0.38	0.42	0.42	0.59
10	0.17	0.21	0.22	0.29	0.29	0.39	0.37	0.52
11	0.15	0.17	0.15	0.27	0.23	0.36	0.26	0.47
12	0.14	0.20	0.23	0.19	0.26	0.25	0.36	0.41
13	0.08	0.16	0.15	0.16	0.15	0.21	0.21	0.38
14	0.19	0.24	0.18	0.20	0.18	0.25	0.25	0.37
15	0.07	0.03	0.10	0.11	0.13	0.17	0.15	0.25

[1] Growth rates below the dashed line will average 4 rings per inch; growth rates below the solid line will average 6 rings per inch.

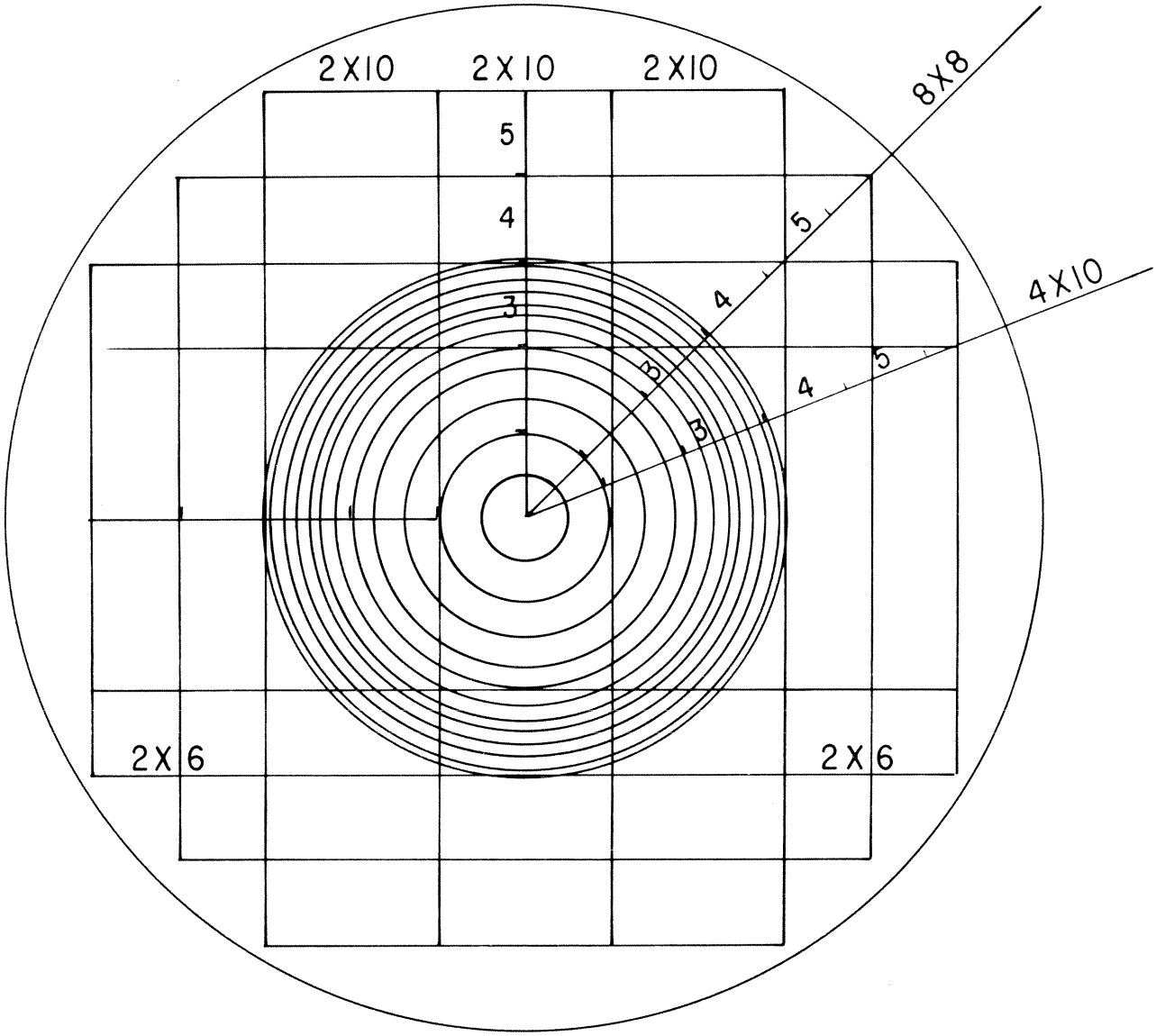

Figure 2.—Trees in the mean diameter class of the 7-1/2 by 15 spacing (360 surviving trees per acre) produce timber that will qualify as dense, on the basis of 6 rings per inch at d.b.h. The check (√) indicates where the ring count should be made on dimension timbers not containing the pith. Scale 1/2:1 inch.

8x8 timber meeting dense requirements could be produced. If only 2-inch dimension material were desired, sawing would yield three 2x10 and two 2x6 pieces, all meeting the dense requirement of 6 rings per inch.

From a sawtimber standpoint, the primary interest will not be the average tree but the 100 to 150 best and largest trees. Figure 3, a diagram of the growth pattern of the first diameter class above the average or mean class, shows that all timbers and most of the 2-inch dimension stock will meet the 6-rings-per-inch specification. A similar diagram of the growth pattern of trees in the second class above the mean class indicates these trees will not average 6 rings per inch at the appropriate measurement points.

However, SPIB stipulates that lumber with 4 rings per inch qualifies as dense if it averages at least 50 percent summerwood.

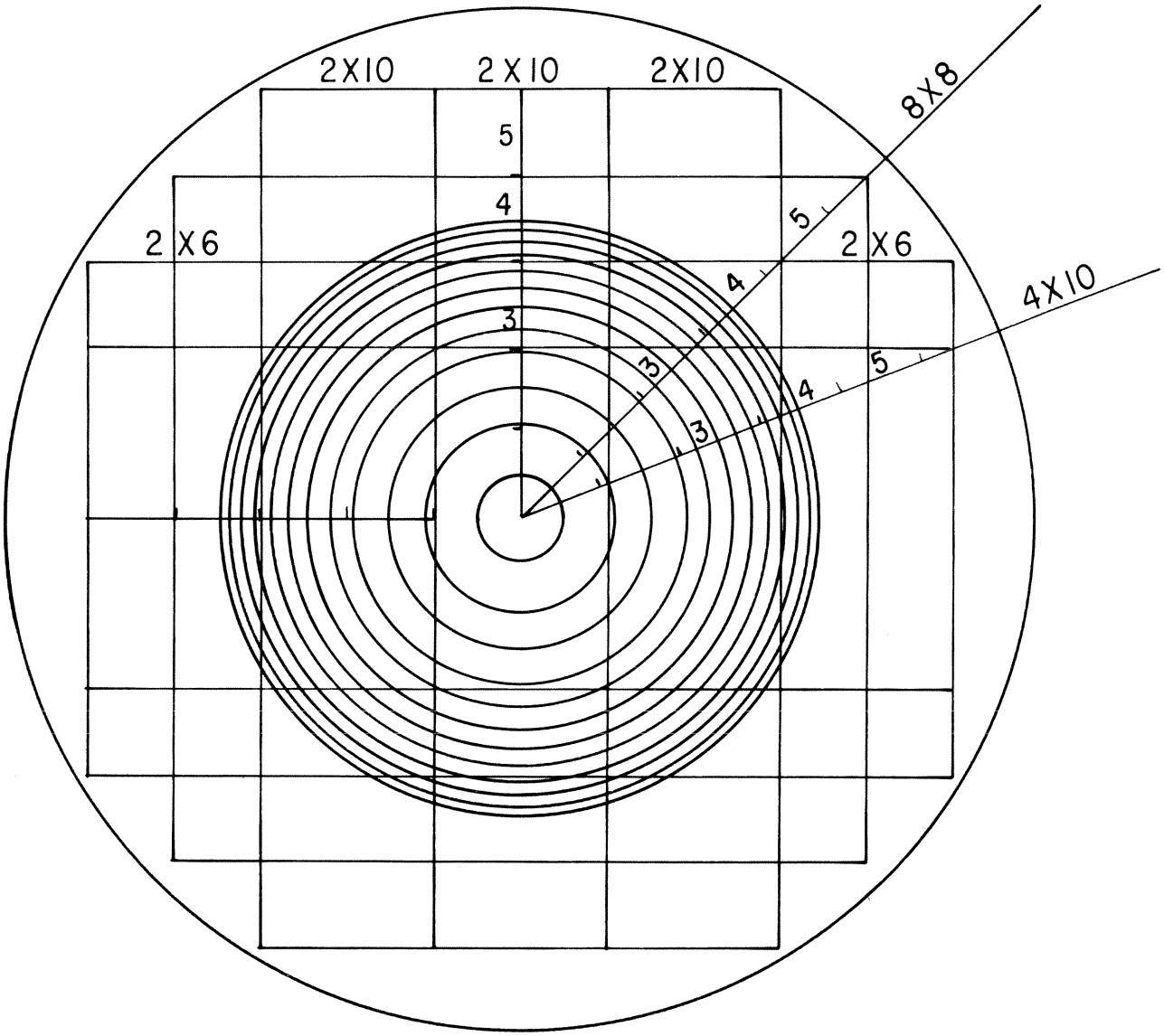

Figure 3.—Growth pattern of the first diameter class above the mean class in the 7-1/2 by 15 spacing. Scale 1/2:1 inch.

Larson (1957) reports that natural slash pine will average 50 percent summerwood by age 10, with a steady increase to 60 percent by age 21. Although Larson's increment core samples were taken at 3.5 feet above ground, a number of studies have reported a high degree of correlation between average wood properties at d.b.h. and averages for the entire tree (Mitchell and Wheeler 1959; U.S. Forest Service 1965).

There is little doubt that, in the 7-1/2 by 15 spacing, the 360 trees per acre surviving at age 15 will average 4 rings per inch at the appropriate measurement points. Diagrams of growth patterns of trees in the 15 by 15 spacing (180 survivors per acre at age 15) show that trees in the mean diameter class and below will meet the 4-rings-per-inch requirement (fig. 4). Diagrams of the growth patterns of larger trees indicate some dense material can be expected from the first diameter class above the mean, but none can be expected from any larger class.

According to the National Bureau of Standards, U.S. Department of Commerce,

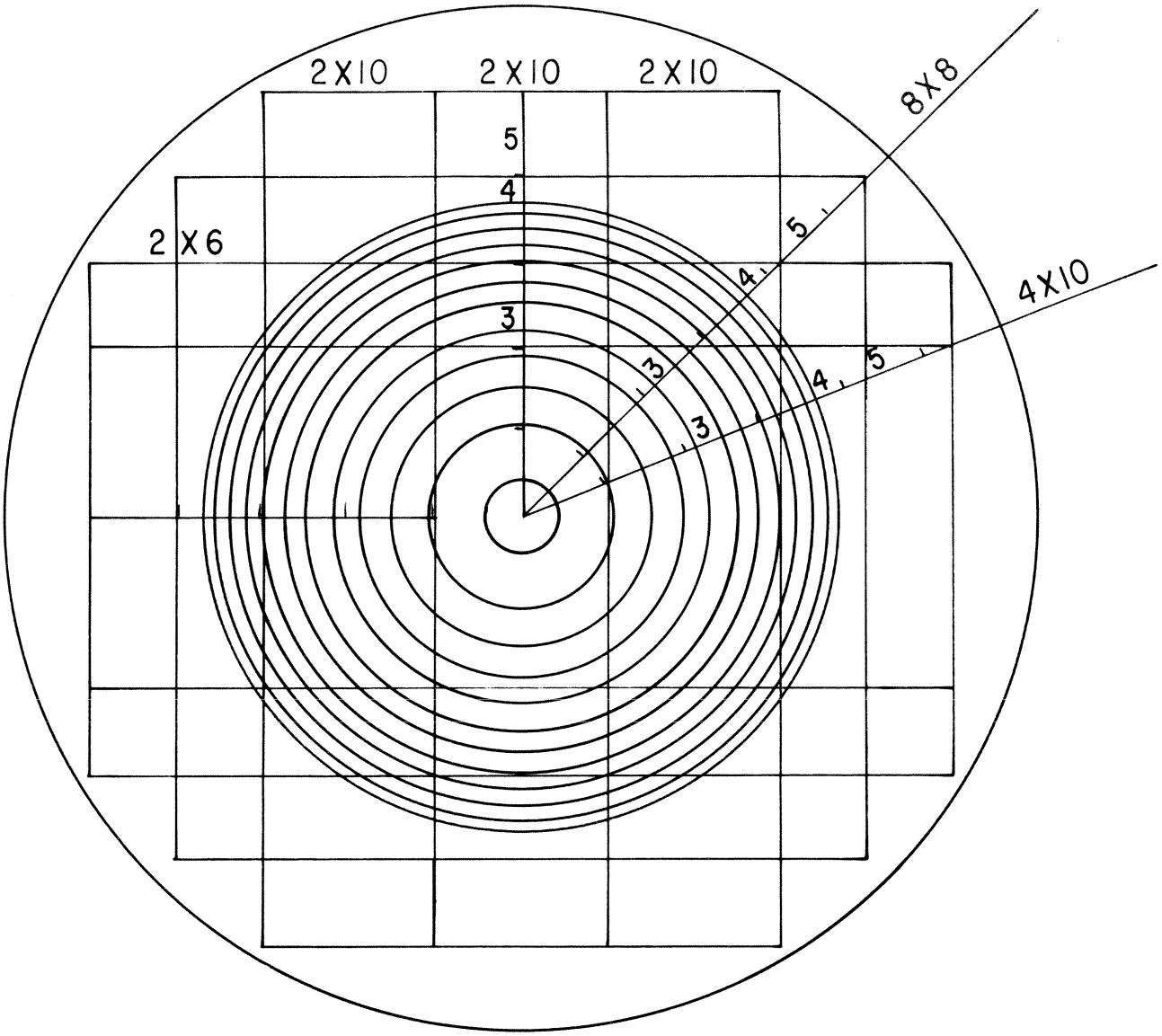

Figure 4.—Growth pattern of the mean diameter class for the 15 by 15 spacing. Scale 1/2:1 inch.

CS-259-63, any log that will produce "dense" dimension lumber and timber will also qualify as veneer stock. Discarded veneer cores average 4 to 5 inches in diameter so the wide-ringed core is no particular problem.

Although the ring counts established relate to measurements at d.b.h., the grading rules specify that ring count can be made at either end of a timber. Inspection of two trees selected at random from two plantations, 28 and 30 years of age, showed the ring pattern at 17 feet to be about the same as at d.b.h. Comparing the total number of rings at 17 feet with the same number of rings at d.b.h., counting from the pith, shows the diameters are similar:

Spacing	Number of annual rings	D.b.h.	17 feet
		Inches	
15 by 15	23	9.92	10.08
8 by 8	25	7.44	7.20

The difference in total diameter at d.b.h. and 17 feet can be primarily attributed to the difference in age at the two points.

Summerwood Percentage and Wood Density

Because summerwood percentage is highly important in quality timber production, a logical question is whether this characteristic is affected by spacing. The evidence seems preponderant that spacing has little effect on either summerwood percentage or specific gravity.

Larson (1957) found growth rate exerted a negligible influence on both summerwood percentage and specific gravity of natural slash pine. Data filed at the Southeastern Forest Experiment Station show percentage summerwood to have little correlation with stand density. This unpublished study was designed specifically to evaluate the effect of age, site, and spacing on the growth and yield of planted slash pine. Zobel et al. (1965), reporting on a localized study in South Carolina, found wood density of loblolly pine to be practically independent of stand density.

Banks and Schwegmann (1957) found the same lack of significant correlation between growth rate and wood density in both *Pinus taeda* and *Pinus patula* grown in South Africa. These researchers found the aggregate density of fast-grown material ". . . as great and sometimes greater than that for slow-grown trees owing to the larger percentage of dense wood formed by the former towards the end of the rotation." They further reported ". . . that the radial, tangential, longitudinal, and volumetric shrinkage is virtually the same for both slow- and fast-grown timber." And, Jayne (1958) found spacing to have only a minor effect on the specific gravity of red pine.

Production of Clear Material

Stand density does directly influence the production of *clear* material. Close spacings cause early self-pruning; wide spacings result in large knotty cores and produce little clear material at 25 and 30 years of age.

Since spacing has little influence on the production of dense lumber, the forest manager can use a wide spacing and artificial pruning to produce clear lumber and veneer stock, or a narrow spacing that will induce self-pruning. Which method is better? Data filed at the Naval Stores and Timber Production Laboratory, Olustee, Florida, show that 800 trees on site 70 (25-year basis) at age 11 will appear as follows:

Diameter class	Number of trees[1]	Height *Feet*	Crown ratio percent	Height of live crown above ground *Feet*
2	19	....	....	....
3	130	....	....	....
4	244	34	48	17.7
5	243	37	51	18.1
6	135	39	54	17.9
7	29	40	57	17.2

[1] A comprehensive publication covering this, and many other aspects, is being prepared.

According to Paul (1938), dead limbs and stubs of slash pine are not shed for about 6 years, so the site 70 stand would be 17 years or older before clear material could be laid down on the butt log. At age 17 the distribution of this stand would be as follows:

Diameter class	Number of trees
2	5
3	39
4	102
5	162
6	189
7	167
8	104
9	32
10	1

The largest trees are 7, 8, and 9 inches in diameter. Despite heavy stocking, the knotty core on what should be the final crop trees will not be small; and the high stand density will severely limit saw-log and veneer production. Eighteen percent of the stand at age 17 is nonmerchantable for pulpwood.

Paul further points out that small branches of southern pine often persist longer after dying than larger ones. Branches less than ½ inch in diameter have been known to persist for almost 50 years.

The three dense structural grades, as defined by the SPIB rules, permit knots of varying sizes (table 3). For example, when the widest face on timbers and dimension stock is 10 inches, knots are permitted to range from 3/4 inch in Dense Structural 86 to 2-3/4 inches in Dense Structural 65. As face width increases, permissible knot size increases.

Paul (1938) reports average knot size to be 1/2 inch in the first 20 feet of the stem

Table 3.—A partial listing of knot sizes permitted by SPIB in the three dense structural lumber grades

Nominal width of face (inches)	Knot size at the edge of wide face			Knot size on the narrow face[1]		
	Structural grade			Structural grade		
	86	72	65	86	72	65
	Inches					
4	5/16	5/8	13/16	1/2	1-1/8	1-3/8
5	3/8	3/4	1	5/8	1-3/8	1-3/4
6	7/16	15/16	1-1/8	3/4	1-5/8	2
8	5/8	1-1/4	1-1/2	1	2	2-1/2
10	3/4	1-1/2	2	1-1/8	2-1/4	2-3/4
12	7/8	1-7/8	2-3/8	1-1/4	2-3/8	3
14	1	2	2-1/2	1-5/16	5/8	1/4

[1] Permissible knot size in the center of the face is just about double that permitted at the edge of the wide face.

in natural slash pine stands ranging from 330 to 460 trees per acre. Only 5 percent of the knots were more than 1 inch in diameter. Knot sizes in stands planted at similar stocking will probably be somewhat larger because heavier initial stocking in the natural stand suppresses knot size. It appears that knot size in planted stands of 300 or more trees per acre will not be a limiting factor in the larger timbers, except for structural grade 86. Grades 72 and 65 generally permit knots up to 2-3/4 inches in large dimension stock.

Considering the limiting effect of close spacing on tree size and board-foot production, artificial pruning is an appealing alternative. If total sawtimber or veneer stock yield is compared at a given age, such as 30 years, producing clear material through use of wide spacing and artificial pruning will be cheaper than using close spacing and natural pruning. Records show, for example, a surviving stand of 200 planted slash pine per acre on site 70 produces about 7,300 board feet at age 25; a stand of 800 trees produces about 24 percent as much.

The author has shown that the knotty core can be held to 5 or 6 inches through the use of two-phase pruning (Bennett 1956). This is about 3 inches smaller than the knotty core expected from the 136 largest trees in an 800-tree stand. The difference in net return between butt logs with 5-inch and 7-inch knotty cores, from the study just cited, was 69 cents based on a premium of $30 per thousand for clear boards. The total cost of pruning, which was by hand, averaged about 10 cents per tree. Although the same type of pruning would cost more today, mechanical pruners are being developed to permit limbing to any height.

SUMMARY AND CONCLUSIONS

Spacing apparently does not profoundly affect the production of dimension lumber and timbers that meet SPIB's "dense" classification. Neither does spacing affect summerwood percentage or specific gravity in the production of quality timber. Thus, there is little point in maintaining heavy stands for the production of dense material. Although close spacings induce early self-pruning, up to age 25 or 30 a wide spacing (200 to 400 trees per acre) and artificial pruning will result in much more clear volume than a narrow spacing and self-pruning. Also, since only planting at 200 to 400 trees per acre will produce acceptable quantities at age 25 to 30, these wider spacings should be employed, if artificial pruning is possible, when the primary production goal is sawtimber and veneer stock.

LITERATURE CITED

Banks, C. H., and Schwegmann, L. M.
1957. The physical properties of fast- and slow-grown *Pinus patula* and *P. taeda* from South African sources. J. South Afr. Forest. Assoc. 30: 44-59.

Bennett, F. A.
1956. Financial aspects of pruning planted slash pine. U.S. Forest Serv. Southeast. Forest Exp. Sta. Pap. 64, 9 pp.

Collins, A.B. III
1967. Density and height growth in natural slash pine. Southeast. Forest Exp. Sta., U.S. Forest Serv. Res. Pap. SE-27, 8 pp.

Harms, W. R., and Collins, Arthur B. III
1965. Spacing and twelve-year growth of slash pine. J. Forest. 63: 909-912.

Jayne, B. A.
1958. Effect of site and spacing on the specific gravity of wood of plantation grown red pine. Tappi 41(4): 162-166.

Larson, Philip R.
1957. Effect of environment on the percentage of summerwood and specific gravity of slash pine. Yale Univ. Sch. Forest. Bull. 63, 89 pp.

Mitchell, H. L., and Wheeler, P. R.
1959. Wood quality of Mississippi's pine resources. U.S. Forest Serv. Forest Prod. Lab. Rep. 2143, 20 pp.

Paul, Benson H.
1938. Knots in second-growth pine and the desirability of pruning. U.S. Dep. Agr. Misc. Pub. 307, 35 pp.

Southern Pine Inspection Bureau
1968. Standard grading rules for southern pine lumber. New Orleans, La.

U.S. Forest Service
1965. Southern wood density survey. Forest Prod. Lab., U.S. Forest Serv. Res. Pap. FPL-26, 38 pp.

Zobel, Bruce, Ralston, James, and Robards, James H.
1965. Wood yields from loblolly pine stands of different age, site, and stand density. N. C. State Univ. Sch. Forest. Tech. Rep. 26, 23 pp.