United States Department of Agriculture
Forest Service
Southern Forest Experiment Station

Research Note

SO-313
August 1985

Integrated Protection Against Lyctid Beetle Infestations Part II.—Laboratory Dip-Diffusion Treatment of Unseasoned Banak (*Virola* spp.) Lumber with Boron Compounds

Lonnie H. Williams and Joe K. Mauldin

SUMMARY

A manufacturer of conventional moulding wanted a method that would prevent lyctid beetle damage to banak (*Virola* spp.) wood throughout the period from initial cutting in Brazil until final mouldings were in use. Because complete penetration of wood may be obtained, unseasoned banak wood was treated by dip-diffusion with disodium octaborate tetrahydrate ($Na_2B_8O_{13}\cdot 4H_2O$ as TIM-BOR®)[1] or boric acid (H_3BO_3) to determine the dip time, solution temperature, and diffusion storage period that would provide optimum treatment of wood. Visual observations also were made of inhibition of mold growth during diffusion storage as a result of using < 3.0 percent concentrations of sodium pentachlorophenate (NaPCP) with TIM-BOR® and copper-8-quinolinolate (as PQ-57®) with treating solutions of boric acid.

Recommendations for commercial trial treatments of freshly sawn banak and similar woods in the Brazilian Amazon are:

1. *Treatment solution.*—In situations where most boards are 38 mm (1.5 inch) thick, a 25 to 30 percent boric acid equivalent solution of sodium borate (such as TIM-BOR®) should be used, with 4 to 5 kg (8 to 11 lb) of NaPCP added for mold prevention in each 1000 liters (264 gal) of solution.
2. Because heated solutions yield better results and steam heat is often readily available, the treatment solution should be maintained at 50° to 60°C (122° to 140°F).
3. *Dip time.*—A minimum time of 1 minute is suggested.
4. *Diffusion storage.*—Boards should be placed on piling sticks immediately after dipping and stored under a roof or other cover for 1 week.
5. *Other factors.*—Low wood moisture caused by delay between sawing and treating or procedures used for piling treated lumber may affect the penetration of boron into wood and should be tested.

[1]The use of trade, firm, or corporation names in this publication is for the information and convenience of the reader. Such use does not constitute an official endorsement or approval by the U.S. Department of Agriculture of any product or service to the exclusion of others which may be suitable.

This publication reports research involving pesticides. It does not contain recommendations for their use, nor does it imply that the uses discussed have been registered. All pesticides must be registered by appropriate State and/or Federal agencies before they can be used.

CAUTION: Pesticides can be injurious to humans, domestic animals, desirable plants, and fish or other wildlife—if they are not handled or applied properly. Use all pesticides selectively and carefully. Follow recommended practices for the disposal of surplus pesticides and pesticide containers.

INTRODUCTION

Lyctid beetles (true powderpost beetles, Coleoptera: Lyctidae) only infest wood from hardwood (deciduous or broad-leaved) trees, usually when unfinished, recently processed wood with high starch content is concentrated at hardwood processing centers. Beetle infestations cause replace-

Southern Forest Experiment Station/T-10210 U.S. Postal Services Bldg., 701 Loyola Avenue, New Orleans, La. 70113
Forest Service, U.S. Department of Agriculture.
Serving Alabama, Arkansas, Louisiana, Mississippi, E. Oklahoma, Tennessee, E. Texas, Puerto Rico, U.S. Virgin Islands

ment of damaged hardwood lumber and products, expenses of prevention and remedial control, and product liability litigation. Therefore, manufacturers that use beetle susceptible woods such as banak (*Virola* spp.) have these choices: stop using susceptible woods, absorb beetle-caused losses, or use effective prevention measures.

A manufacturer of conventional moulding in the United States sought a method that would prevent lyctid beetle damage to banak wood throughout the period from initial cutting in Brazil until final moulding products were in use. Of several lyctid beetle preventive measures being developed for use in integrated protection programs by industry (Williams 1985), dip-diffusion treatment with boron compounds was chosen for testing because (1) boron treatments have been used successfully for protecting wood from lyctid beetles in Australia and New Zealand,[2,3] and (2) unseasoned wood may be completely penetrated with boron when treated by dip diffusion. Although boron treatments have been studied extensively in many countries (Becker 1976, Bunn 1974, Cockcroft and Levy 1973), boron treatment of banak wood had not been tested before this study. Moreover, recommended treatment procedures for climates and wood species found in the Americas have not been developed (Anon. 1972).

In this laboratory study, unseasoned banak wood was treated by dip diffusion with boron compounds to determine the dip time, solution temperature, and diffusion storage period that would provide an adequate content of boron within wood for prevention of lyctid beetles. Inhibition of mold growth by mold inhibitors in treating solutions was also evaluated.

METHODS AND MATERIALS

Unseasoned Wood.—Four days after unseasoned banak wood bolts arrived from Brazil, they were cut into boards ca. 32 mm (1.25 inches) thick. These boards were stored 8 days at 26.6°C (80°F) and 90 to 100 percent RH until sample boards could be processed and dip-treated. To remove most of the mold growth resulting from high RH storage, each board was planed to 25-mm (1-inch) thickness; then 76 mm (3 inches) were cut from each end and the edges trimmed to produce a board 114 mm (4.5 inches) wide. These boards were processed into moisture-content and dip-treatment samples.

Moisture-Content and Dip-Treatment Samples.—From each of 62 boards, three pieces (76 mm long by 114 mm wide by 25 mm thick; 3 by 4.5 by 1 inches) (fig. 1A, C, and E) were used for wood moisture-content determinations and as untreated control wood. The two remaining pieces of each board (fig. 1B and D) were used as dip-treatment samples (559 mm long by 114 mm wide by 25 mm thick; 22 by 4.5 by 1 inches). From other short boards, an additional 29 dip-treatment samples of the same dimensions were sawn to provide a total of 153 (124 + 29) dip-treatment samples. Only two moisture-content samples were cut as each of the last 29 samples were sawn.

For determination of wood moisture content immediately after sawing, each piece (fig. 1A, C, and E) was weighed, ovendried at less than 60°C (140°F) until repeated moisture meter readings averaged less than 10 percent, and then weighed again. Wet weight (W) and dry weight (W_1) of wood were used to calculate a representative moisture content for each dip-treatment sample by the formula: percent wood moisture content $= \frac{W - W_1}{W_1} \times 100$.

Treatment Solutions.—Two boron compounds, disodium octaborate tetrahydrate ($Na_2B_8O_{13}\cdot 4H_2O$ as TIM-BOR®) and boric acid (H_3BO_3), were tested separately in a 37.8-liter (10-gal) aquarium. As recommended for momentary immersion of boards 25 mm (1 inch) thick, a 20 percent boric acid equivalent (BAE) solution was used (5.1 kg in 30 liters; 11.2 lb in 7.9 gal) (Anon. 1972). By weight, this solution was ca. 14.5 percent TIM-BOR®.

Because the solubility of boric acid in water increases with increasing temperature, a different solution of boric acid was prepared for each test temperature. At 33°, 46.5°, and 58°C (91.4°, 115.7°, and 136.4°F), 2.1, 3.0, and 4.0 kg (4.7, 6.6, and 8.8 lb) of boric acid were added to 30 liters of solution. Available technical data on boric acid suggested that these amounts should solubilize at these respective temperatures.

[2]Williams, L. H. 1974. Personal correspondence with Dr. N. Tamblyn, Leader, Preservation Group, Forest Products Laboratory, South Melbourne, Australia, June 12, 1974.

[3]Williams, L. H. 1975. Personal correspondence with Dr. A. J. McQuire, Forest Research Institute, New Zealand, Feb. 12, 1975.

Principal Entomologist and Project Leader, respectively, Southern Forest Experiment Station, USDA Forest Service, Gulfport, MS. 39505. We thank Lawton Lumber Company, Greenville, South Carolina, for their excellent cooperation in providing test wood. For provision of test chemicals and technical data, we also thank U.S. Borax and Chemical Corporation, Los Angeles, California; Borax Holdings Ltd., London, England; and Chapman Chemical Company, Memphis, Tennessee.

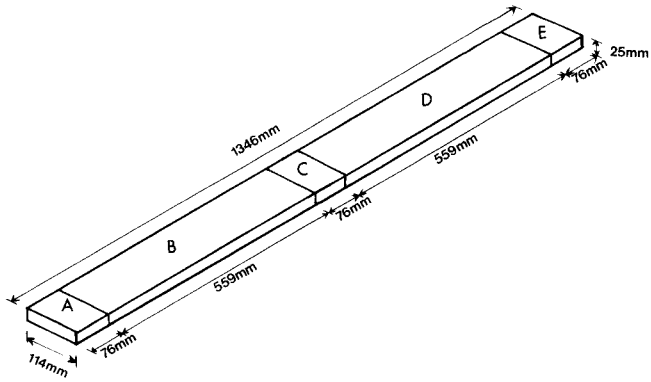

Figure 1.—*Dimensions of planed boards cut from unseasoned banak wood bolts. Pieces A, C, and E were used for untreated control wood and for determination of moisture content of boards before dip treatment. Pieces B and D were dip-treated.*

Copper-8-quinolinolate (PQ-57®) and sodium pentachlorophenate (NaPCP) were used separately in treating solutions for inhibition of mold growth when treated boards were stored for diffusion. Before adding boric acid, 900 ml of PQ-57® were added to 29.1 liters of water, and 0.15 kg (0.33 lb) of NaPCP was added to 30 liters of water, the recommended rate for TIM-BOR® solutions (Anon. 1972).

Treatment Procedures.—For TIM-BOR®, treatment variables were (1) dipping times of 30, 60, or 120 seconds, (2) solution temperatures of 33°, 46.5°, or 58°C, and (3) diffusion storage periods of 1, 2, or 3 weeks. Each of these 27 treatment combinations was replicated 3 times for a total of 81 treated boards. For boric acid, the same variables as above were tested except that the dip treatment at 46.5°C for 120 seconds for 1, 2, and 3 weeks of diffusion storage was omitted, leaving a total of 72 treated boards.

All dipped boards were stored for 1, 2, or 3 weeks at 33.1° ± 0.3°C (91.6° ± 0.9°F) and 82.3 ± 2.2 percent RH to simulate the climatic conditions of diffusion storage at our cooperator's plant site in Brazil. Wetting by condensate water was minimized by storing dipped boards on sticker boards 19 mm (0.75 inch) thick and covering them with plastic sheets.

Test Samples.—The appropriate boards were removed from diffusion storage each week and rapidly dried by forced, unheated air until their moisture content was below 12 percent. From a piece 127 mm (5 inches) long that was sawn from the midlength of each dip-treated board (fig. 1B and D), samples 38 mm (1.5 inches) long were cut from each end for chemical analyses (fig. 2F and I). Next, a piece 38-mm (1.5 inches) long (fig. 2G) was cut and the thickness halved. One half (fig. 2G-1) and the shorter remaining piece (ca. 5 mm; 0.25 inch long) (fig. 2H) were used for color tests of percent BAE in wood. The other half (fig. 2G-2) was exposed to lyctid beetles.

Color Tests.—For all boards treated with TIM-BOR® and boric acid, color tests (Anon. 1972) were done by spraying an alcoholic extract of tumeric on a dry cross-sectional surface (fig. 2H) and on a dry center surface (fig. 2G-1) of each board, allowing the surface to dry, and then spraying a solution of salicylic acid on the same surface. After 10 minutes, the approximate percent BAE in wood was indicated by the following colors: bright red = 0.30 or more, red-brown = 0.25, brown-yellow = 0.20, and yellow (no color change from tumeric) = < 0.15.

A dot area grid (10-mm spacing) was used to estimate the percentage of each board's cross-sectional area that was brown or yellow, which suggested that < 0.25 percent BAE was present. Counts of dots covering these colors were compared to counts of dots in the total cross-sectional area for calculating percentages.

Chemical Analyses.—As described (Anon. 1972), core sections (ca. 10 mm thick by 4 mm wide; 0.4 by 1.6 inches) were sawn from the geometric center of each piece (fig. 2F and I) of the 81 TIM-BOR®-treated boards, ground into sawdust, ashed, and chemically analyzed for boron content (percent BAE ovendried wood basis). For each day's analyses, a sample of untreated wood from pieces A, C, or E (fig. 1) was also analyzed. No analyses

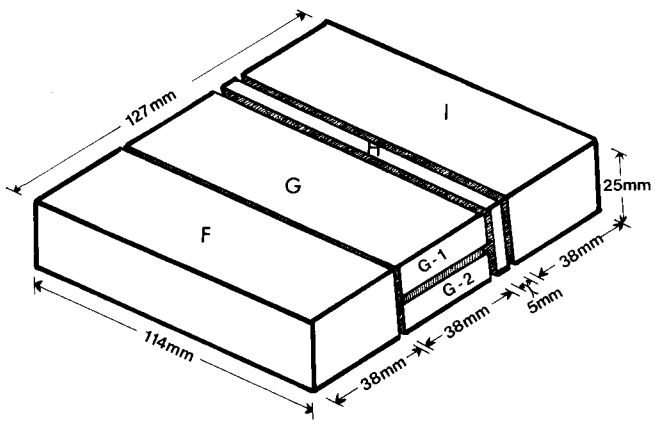

Figure 2.—*After dip-treated boards B and D (fig. 1) were removed from diffusion storage and dried, a 127-mm-long piece was sawn from the center of each treated board to provide the following samples: pieces F and I were used for chemical analyses; piece G was cut in half horizontally (hatched line)—the center surface of G-1 was color-tested for boron and G-2 was exposed to beetles; and piece H was color-tested on one cross-section surface.*

were made on boards treated with boric acid because the copper in PQ-57® may have interfered with the analyses for boron.

Beetle Exposure Tests.—Samples treated with TIM-BOR® and boric acid (fig. 2G-2) and similar untreated samples, usually taken from the same boards, were equilibrated at 25° ± 1°C and 70 ± 5.0 percent RH for 15 days. Each sample was exposed to 10 *Lyctus brunneus* (Stephens) adults in a 150-mm-diameter plastic petri dish and stored in the same conditions. Dish bottoms were abraded to aid crawling by beetles. Dead adults were removed after 8 weeks, and larvae within wood were counted by radiographing samples about 7 months after exposure to adults.

Data Analyses.—For the TIM-BOR®-treated sample only, three-way ANOVA tests ($P=0.05$) of boron content data were used to determine the main effects and interactions among treatment variables: 3 dip times, 3 solution temperatures, and 3 storage times. Because moisture of boards before treatment varied among the 27 treatment combinations, moisture content was used as a covariate to adjust boron content data for differences in moisture among treated boards. For all analyses, percentage data were transformed by arc sine of the square root of the proportion. Unadjusted boron content means are tabulated for discussion, but adjusted means are used to graphically show relationships of treatment variables.

RESULTS

Color Tests After TIM-BOR® Treatments.—Of the 81 boards, 70 were completely penetrated by at least 0.25 percent BAE, as indicated by presence of reddish-brown or bright red coloration throughout their cross-sections (fig. 2H). Example color-test results are shown for 58°C samples only (fig. 3A, B, and C; cross-sections are the smallest of each paired set of samples). The 11 remaining boards had brown or yellowish-brown areas that probably contained <0.20 percent BAE, the level generally specified for lyctid beetle prevention in Australia and New Zealand.[2,3] Seven of 27 boards stored for 1 week of diffusion had brown or yellowish-brown spots comprising 5.4 to 17.8 percent of the total board cross-section; only 1 board stored for 2 weeks had a brown spot, which covered 10.8 percent of the cross-section; and 3 boards stored for 3 weeks had brown spots covering 5.3 to 12.7 percent of the cross-sectional area (e.g., fig. 3A—Nos. T55 and T56 and fig. 3C—No. T71). The purple areas or streaks that were also present apparently resulted from test reagent reaction with extractives or the mildew growth that was in some boards before treatment.

Color tests of the center tangential surface of each board (fig. 2G-1), the largest of each paired set of samples in fig. 3, also show areas with possibly low percent BAE. These tests suggest how much boric acid was present in wood surfaces (fig. 2G-2) exposed to beetles. (Because our cooperator resaws many boards lengthwise before the manufacture of moulding, complete penetration of boards by at least 0.20 percent BAE may be needed for protection of products during distribution.)

Color Tests After Boric Acid Treatments.—Most of the 72 boards were completely penetrated by at least 0.25 percent BAE, as indicated by the red or reddish-brown reactions (e.g., 58°C samples only, fig. 3D, E, and F). The resulting colors are less brilliantly red than the color tests of TIM-BOR® treatments because the boron concentrations (as weight percent boric acid) were much lower in the boric acid solutions than in the TIM-BOR® solution, which was 22 percent by hydrometer readings (Anon. 1972). Solubility data suggest that the boric acid solutions should have ranged from ca. 6 to 15 percent boric acid. However, considerable precipitate resulted when solutions were mixed, possibly because the PQ-57® in the solutions reduced the potential solubility of boric acid. The color test results indicate that the resulting red coloration deepened and darkened as solution concentration increased with higher temperatures and as diffusion storage time increased.

Visual inspections suggested that copper-8-quinolinolate prevented mold and mildew growth as well as did NaPCP during diffusion. More testing under field conditions is needed to confirm this observation.

Beetle Exposure Tests.—Visual inspections for frass and x-ray analyses for larvae in wood indicated that none of the 81 samples treated with TIM-BOR® or the 72 samples treated with boric acid were infested by lyctid beetles. Analysis with x-rays indicated that 21 of 81 untreated control samples comparatively tested with the TIM-BOR® samples and 16 of 72 untreated control samples tested with the boric acid samples were infested with beetles. Because so few control samples were attacked, we have limited evidence that both chemical treatments effectively prevented beetles. Beetle rearing experiences suggest that the low number of untreated samples being attacked is not unusual; many pieces of banak simply are not attacked because nutrients are lacking or repellent

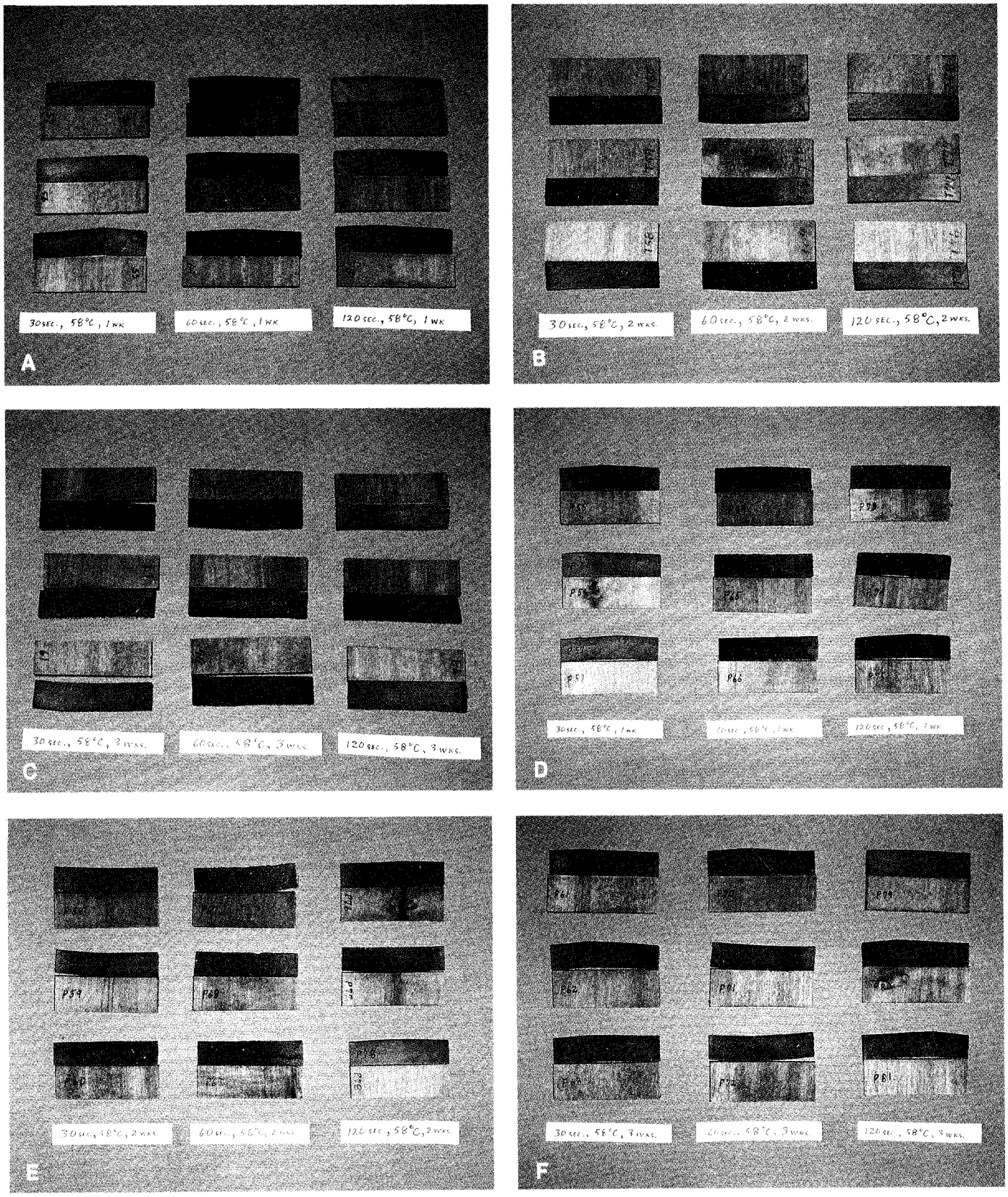

Figure 3.—*Examples (58°C samples only) are shown of the color test reactions of samples treated with TIM-BOR® (A, B, and C) and boric acid (D, E, and F). Cross-sections are the smaller of each paired set of samples. Approximate boron contents (percent boric acid equivalent) indicated by colors are bright red = 0.30 or more, reddish-brown = 0.25, brownish-yellow = 0.20, and yellow (no color change) = < 0.15.*

extractives are present. Also, mold fungi may have used the nutrients that make wood attractive to beetles. Beetle prevention or repellency by the mold inhibitors is possible but not considered likely because the centers of boards that probably did not contain these chemicals were exposed to beetles.

Chemical Analyses.—Results of titration analyses (table 1) and color tests were generally in agreement for various treatment combinations. Results for individual boards, however, did not necessarily agree. One possible reason for this is that the chemically analyzed core sections (fig. 2F and I) and color test samples (fig. 2G and H) were from different areas within boards. Also, the color tests are designed only as an easily done estimation of boron concentrations.

Treatment Variables.—Extreme variability of the boron content data prohibits precise determination of the influence of treatment variables on the boron content in wood. All possible interactions among all treatment variables were significant. Use of wood moisture as a covariate did not remove the variability; the covariate was found to be nonsignificant. For example, some samples having low moisture content, those dipped for 30 or 120 seconds at 58°C and stored for 2 weeks, had the highest boron concentrations (table 1).

Two-way ANOVA analyses conducted separately by storage time, with moisture content as a covariate, showed that there were significant interactions between dip temperature and dip time for both 1- and 2-week data (fig. 4). Generally, boron content increased significantly with increasing dip time only at 33°C for 1 week of storage and with increasing dip temperature for 2 weeks of storage. No significant main effects or interactions were determined for 3-week data. Therefore, we concluded that the 3-week data may have been confounded by the mean RH being lower (80.2 percent) during the third week of diffusion than during the first (83.3 percent) and second (82.8 percent) weeks. Also, the initial moisture content of boards treated at 46.5°C was 66.2 percent, while that of boards treated at 33°C was 86.6 percent. This difference may have contributed to the variation in boron contents.

Three-way ANOVA tests of only the 1- and 2-week data, with moisture content as a covariate, showed the three-way interaction among dip time, dip temperature, and storage time to still be significant. Generally, the concentration of boron was increased by longer diffusion storage and higher solution temperature.

Table 1.—*Mean*[1] *(± SD) boron contents (percent boric acid equivalent, ovendried wood basis) for banak* (Virola *spp.) wood dipped in TIM-BOR® solution*[2]

Dip temp. (°C)	Dip time (s)	Diffusion storage time (wk) 1	2	3
33	30	0.04±0.06	0.26±0.05	0.29±0.14
33	60	0.10±0.09	0.17±0.06	0.13±0.17
33	120	0.23±0.02	0.35±0.05	0.33±0.07
46.5	30	0.00±0.00	0.23±0.11	0.23±0.17
46.5	60	0.10±0.15	0.42±0.13	0.19±0.09
46.5	120	0.18±0.05	0.09±0.11	0.23±0.20
58	30	0.08±0.07	0.68±0.21	0.21±0.12
58	60	0.27±0.02	0.40±0.03	0.04±0.04
58	120	0.11±0.04	0.56±0.05	0.03±0.06

[1]Mean (± standard deviation) of 3 replicates at each treatment combination.

[2]Ca. 14.5 percent TIM-BOR® by weight, or 22 percent boric acid equivalent.

DISCUSSION

Tests involving more wood samples having uniformly high moisture content near that of freshly sawn banak lumber might help clarify the influence of our treatment variables on boron penetration. However, tremendous logistical difficulties are involved in obtaining sufficient untreated wood from the Amazon jungle while maintaining high moisture content with limited deterioration from mold, mildew, or decay fungi. These difficulties are compounded because banak wood has extremely variable characteristics. Banak is a generic wood industry term loosely used to describe about 40 Central and South American species in the genus *Virola.*

Therefore, we consider both our results and research by others with other woods when recommending procedures to use in commercial trials of boron dip-diffusion treatments of banak lumber in Brazil. For example, other researchers have shown that loading (amount of borate on wood for diffusion after it is dipped) may be affected by wood surface characteristics, dip time, solution temperature, concentration, and agitation. However, because the use of highly concentrated boron solutions compensates for short immersion times, loading is primarily affected by wood surface characteristics and wood moisture (Harrow 1954, McNabb and Taylor 1953). Also, heating and agitating the solution is primarily done to keep the high concentration of boric acid and borates in solution (Warren and others 1968). Thus, the loading of borate on our planed test boards was probably not affected greatly by dip temperature or time, but

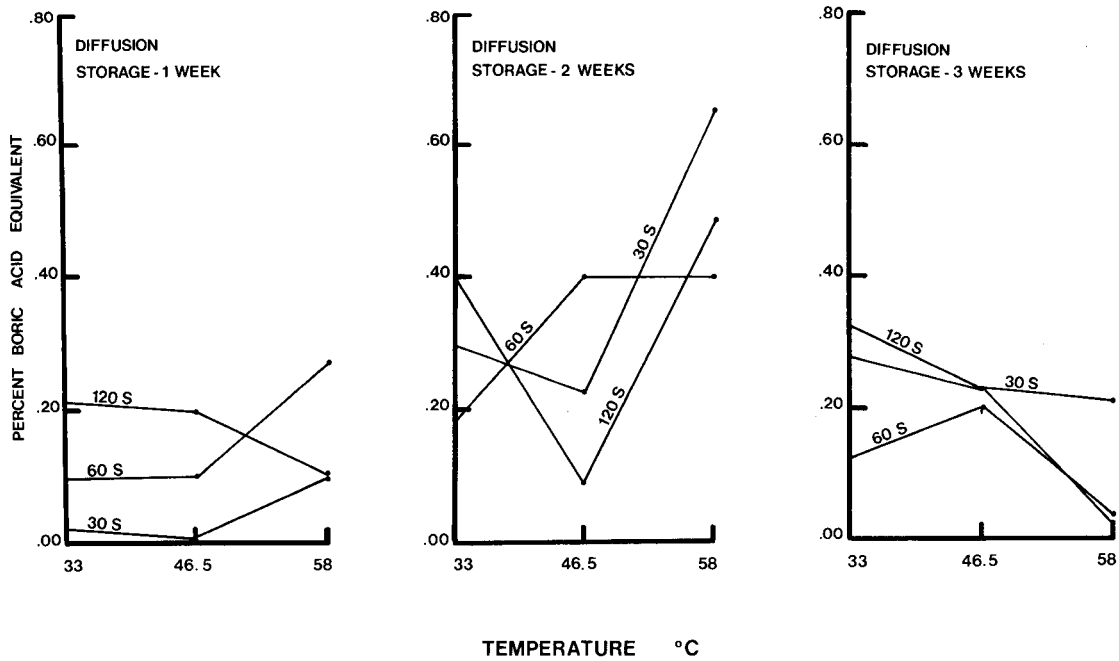

Figure 4.—*Relationships of treatment variables and mean percent boric acid equivalent in wood, adjusted for variations in moisture content of wood.*

it was likely less than what could be obtained on rough-sawn boards at sawmills. However, the moisture of our samples was lower than that of freshly sawn wood, which would tend to increase the loading.

Variables that affect the rate of diffusion include wood species, density, moisture, thickness, ambient temperature and RH, length of storage, and how wood is stored for diffusion. Our results clearly show that banak wood is easily treated with the diffusion process. Warren and others (1968) found that boron content in board centers, given the same loading and diffusion storage period, approximately doubles with a rise in ambient temperature from 7.2° to 18.3°C (45° to 65°F). Our diffusion temperatures were similar to those in the Brazilian Amazon, but our test RH was about 10 percent lower. Therefore, diffusion should occur faster in practice in Brazil because moisture would be high in freshly cut wood, and the high RH would maintain it. Smith and Williams (1969) found that the rate of diffusion was not greatly affected when wood moisture was above 60 percent, but the required diffusion time nearly doubled when wood moisture was reduced from 60 to ca. 40 percent. After considering all factors, we think that an adequate amount of boron in wood for lyctid beetle prevention could be obtained with 1 week of diffusion storage when freshly sawn wood is treated.

In other papers in this series on integrated protection against lyctid beetles, boron concentrations and beetle exposure test results will be reported from commercial trials conducted by Lawton Lumber Company on boron treatment of banak wood in Brazil.

RECOMMENDATIONS

Our recommendations for commercial trials with freshly sawn banak and other similar woods in the Brazilian Amazon are:

1. *Treatment solution.*—In situations where most boards are 38 mm (1.5 inch) thick, a 25 to 30 percent BAE solution of sodium borate (such as TIM-BOR®) should be used, with 4 to 5 kg (8 to 11 lb) of sodium pentachlorophenate added for mold prevention in each 1000 liters (264 gal) of solution.

2. Because heated solutions yield better results and steam heat often is readily available, the treatment solution should be maintained at 50° to 60°C (122° to 140°F) to aid penetration and to agitate the solution.

3. *Dip time.*—A minimum time of 1 minute is suggested.

4. *Diffusion storage.*—Boards should be placed on piling sticks immediately after dipping and stored under a roof or other cover for 1 week.

5. *Other factors.*—Low wood moisture caused by delay between sawing and treating or procedures used for piling treated lumber may affect the penetration of boron into wood and should be tested.

LITERATURE CITED

Anon. TIM-BOR® plant operators' manual of recommended practice. London, England: Borax Consolidated Limited; 1972. 21 p.

Becker, Gunther. Treatment of wood by diffusion of salts. Journal of the Institute of Wood Science. 7(4):30–36; 1976.

Bunn, Rosemary. Boron compounds in timber preservation: An annotated bibliography. Tech. Pap. No. 60. Wellington, New Zealand: New Zealand Forest Service; 1974. 112 p.

Cockcroft, R.; Levy, J. F. Bibliography on the use of boron compounds in the preservation of wood. Journal of the Institute of Wood Science. 6(3): 28–37; 1973.

Harrow, K. M. A study of the momentary immersion method for diffusion treatment of *Pinus radiata* with boron compounds. New Zealand Journal of Science and Technology, Section B. 36(1): 56–81; 1954.

McNabb, A.; Taylor, W. B. Some theory relating to the diffusion of chemicals in green timber. New Zealand Journal of Science and Technology, Section B. 35(1): 113–125; 1953.

Smith, D. N.; Williams, A. I. Wood preservation by the boron diffusion process—the effect of moisture content on diffusion time. Journal of the Institute of Wood Science. 4(4): 3–10; 1969.

Warren, B. R.; Low, D. C.; Mirams, R. V. The influence of temperature on the diffusion of boron compounds in *Pinus radiata* timber. New Zealand Journal of Science. 11(2): 219–229; 1968.

Williams, Lonnie H. Integrated Protection Against Lyctid Beetle Infestations. Part I. The basis for developing beetle preventive measures for use by hardwood industries. Brochure. New Orleans, LA: U.S. Department of Agriculture, Forest Service, Southern Forest Experiment Station; 1985.

☆U.S. GOVERNMENT PRINTING OFFICE: 1985— 659-282