USDA Forest Service Research Note SE-165 October 1971

A HYDRAULICALLY OPERATED PINE CONE CUTTER

Abstract.--Mature cones of slash pine (Pinus elliottii Engelm. var. elliottii) and longleaf pine (P. palustris Mill.) can be easily bisected along their longitudinal axes with the hydraulic pine cone cutter described. This cutter eliminates the two major problems of earlier models--undue operator fatigue and the necessity of soaking mature opened cones prior to cutting. The tool was developed to aid in evaluation of damage to pine cones caused by seedworms (Laspeyresia spp.) and coneworms (Dioryctria spp.).

In studies of insects which affect pine seed production, it is often necessary to split thousands of pine cones and examine them for the presence of insects or insect damage. This tiring work is easier and faster with the aid of a mechanical cutter. Hand-operated pine cone cutters have been described by Hopkins,[1] the USDA Forest Service,[2] and Winjum and Johnson.[3] Recently, DeBarr and Proveaux[4] described a table model cutter operated by a treadle to bisect mature cones of slash pine (Pinus elliottii Engelm. var. elliottii) and longleaf pine (P. palustris Mill.). The treadle gave a mechanical advantage over the hand-operated models.

We have used the foot-operated model to bisect mature cones along the longitudinal axis for evaluation of damage caused by coneworms (Dioryctria spp.) and seedworms (Laspeyresia spp.). Although it was much easier to bisect cones with this cutter than with the earlier hand-operated models, our operators became fatigued after a few hours of cutting. Use of this model also required soaking the mature, dry cones in water for 4 hours (until the scales closed) before they could be bisected easily. To overcome these problems we developed a hydraulically operated model with sufficient power to bisect closed or open mature cones (fig. 1).

CONSTRUCTION

Materials used for constructing the hydraulic pine cone cutter are listed in table 1. The table top, legs, crossmembers, cutting plates, knife guides, pivot pin brackets, and cylinder support bracket are welded together (fig. 2). A 3/16-inch space must be left between the pivot pin brackets, cutting plates, and knife guides to allow room for the knife blade between them.

The pivot pin brackets are made by welding two pieces of angle iron together to form a T. A 1/2-inch hole is drilled through the center, 1 inch behind the forward edge of each bracket to receive the knife pivot pin. A slot 3/16 inch wide and 4 inches long is cut through the table top between these brackets. The knife blade guides are welded to the forward corners of the cutting plates. A 3/16-inch spacer is fastened between the guides with a bolt inserted through a 1/4-inch hole located 1/2 inch from the top.

[1] Hopkins, D. R. The Osborne tree cone cutting knife. J. For. 54: 534. 1956.

[2] USDA Forest Service. Insects destructive to flowers, cones, and seeds of pine, p. 76. In Annual report 1959. Southeast. Forest Exp. Stn. 1960.

[3] Winjum, J. K., and Johnson, N. E. A modified-knife cone cutter for Douglas-fir seed studies. J. For. 58: 487-488. 1960.

[4] DeBarr, G. L., and Proveaux, M. T. A new table model cone cutter. USDA Forest Serv. Tree Plant. Notes 19(4): 19-20. 1969.

Mention of trade names throughout this paper does not constitute endorsement by the U. S. Department of Agriculture to the exclusion of other, equally acceptable products.

Southeastern Forest Experiment Station-Asheville, North Carolina

U.S. Department of Agriculture-Forest Service

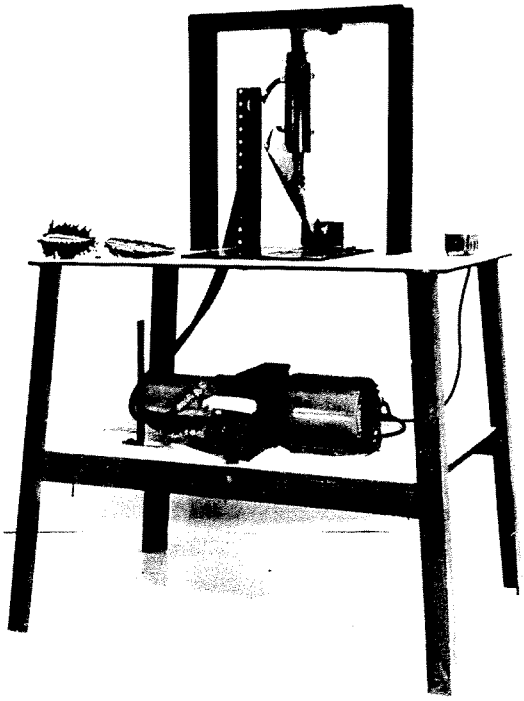

Figure 1.--The hydraulically operated pine cone cutter.

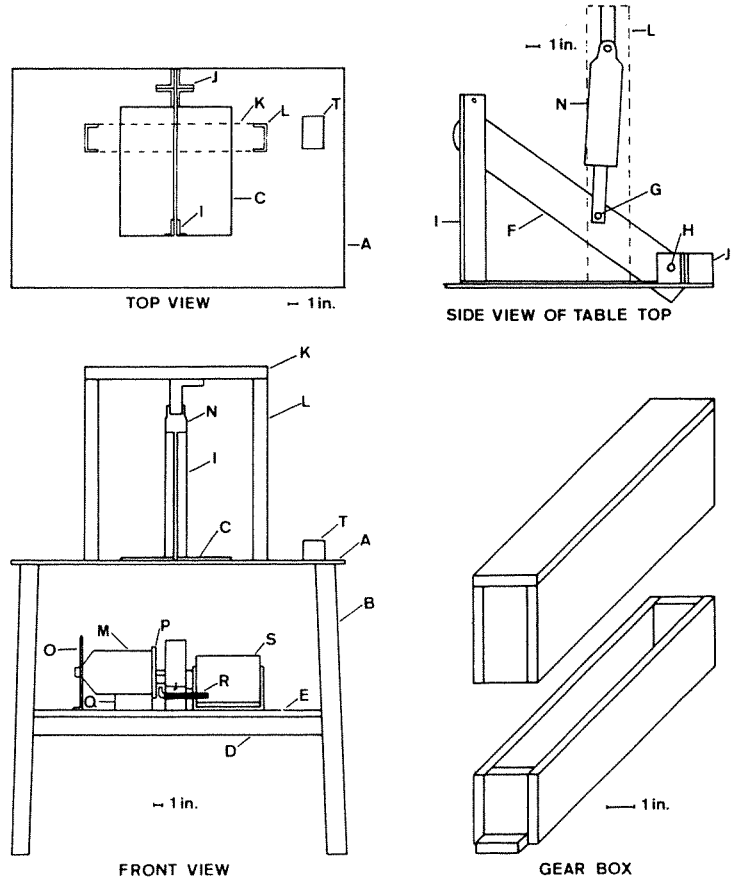

Figure 2.--Assembly diagram for the hydraulic pine cone cutter. See table 1 for identification of lettered parts.

Table 1.--Parts list for construction of the hydraulically operated pine cone cutter

Sub-assembly	Parts (letters identify parts in figure 1)	Construction material	Dimensions	Number required
		Sizes in inches	Inches	
Table	(A) Top	3/8 steel plate	24 x 36	1
	(B) Leg	1/4 x 2 x 2 angle iron	31	4
	(C) Cutting plate	1/4 steel plate	6 x 14	2
	(D) Crossmember	1/4 x 2 x 2 angle iron	36	2
	(E) Motor support shelf	3/4 exterior plywood	23 x 24	1
Cutter	(F) Knife blade	3/16 steel (chain-saw blade)	3 x 20	1
	(G) Knife wrist pin	3/8 round steel bar	1-1/2	1
	(H) Knife pivot pin	1/2 round steel bar	1-1/2	1
	(I) Knife guide	1/4 x 1 x 1-3/4 angle iron	13-1/2	2
	(J) Pivot pin bracket	1/4 x 2 x 2 angle iron	2	4
	(K) Top cylinder support bracket	3/16 x 3 channel iron	20	1
	(L) Side cylinder support bracket	3/16 x 3 channel iron	19-1/2	2
Gearbox base	Side panel	3/8 exterior plywood	2-1/2 x 9	2
	Base panel	3/8 exterior plywood	1-1/2 x 11	1
	End panel	3/8 exterior plywood	1-1/2 x 2-1/2	2
Gearbox cover	Side panel	3/8 exterior plywood	3-1/2 x 9	2
	Top panel	3/8 exterior plywood	2-1/4 x 9	1
	End panel	3/8 exterior plywood	1-1/2 x 3-1/2	2
Motor and pump assembly	Drive gear	lathe gear, 32 teeth	2-3/8 diam.	1
	Driven gear	lathe gear, 64 teeth	4-3/4 diam.	1
	(M) Pump, control valves	Econo-tractor® lift kit		1
	(N) Cylinder	Econo-tractor® lift kit		1
	(O) Rear pump support bracket	1/4 x 1 steel strap	8	1
	(P) Front pump support bracket	1/8 x 1 steel strap	3	1
	(Q) Pump support block	2 x 4 wood	4	1
	(R) Control shaft	3/8 bolt and two nuts	6	1
	(S) Motor	1-1/2 h.p., 1,725 r.p.m., 115 v.-a.c.		1
Miscellaneous	(T) Switch	Box, switch, coverplate		1
	Wire	# 16, 3-wire cord	72	1
	Male plug			1
	Bolts, nuts	1/4 bolts	2	13
	Spacer	3/16 wide for 1/4 bolt		1
	Control shaft pad	vacuum hose	6	1
	Cotter keys		1	4

The knife pivot pin and knife wrist pin are identical. Two 3/32-inch holes are drilled through each pin 1/4 inch from the ends for cotter keys.

We used an old chain saw blade (3/16 by 3 by 20 inches) to make the knife, but it could be made from S. A. E. .01 oil-hardened steel. Two 1/2-inch holes are drilled through the blade to receive the knife wrist pin and the knife pivot pin. These holes are drilled 1 inch below the top edge of the blade and are 6-1/2 inches apart, center to center, with the wrist pin hole located 12 inches from the front of the blade. The lower edge of the blade is sharpened with 1/2-inch bevel each side. The blade is held between the pivot pin brackets with the knife pivot pin and two cotter keys.

An Econo-tractor® hydraulic lift kit was used to operate the cutter. This kit includes a hydraulic pump with built-in control valves, a hydraulic cylinder and support bracket, 6 feet of hydraulic hose, and a linkage system for hand operating the control valves. Any hydraulic system of similar capacity would serve. The cylinder is fastened to the top cylinder support bracket with 3/8-inch bolts, and the cylinder rod is connected to the knife blade with the knife wrist pin and two cotter keys.

The 1,725-r.p.m. electric motor is connected to the hydraulic pump through two lathe gears which halve the r.p.m.'s. These gears are packed with grease and housed in a plywood gear box (fig. 2) which also serves to protect the operator from entanglement. The control lever on the pump permits the cylinder to be opened, closed, or held in any position. Hydraulic hoses are passed from the pump through a 2- by 1-inch, oval-shaped hole behind the left cylinder support bracket to the cylinder. A single-pole, single-throw switch (self-grounded) is mounted on the top of the table to start or stop the drive motor.

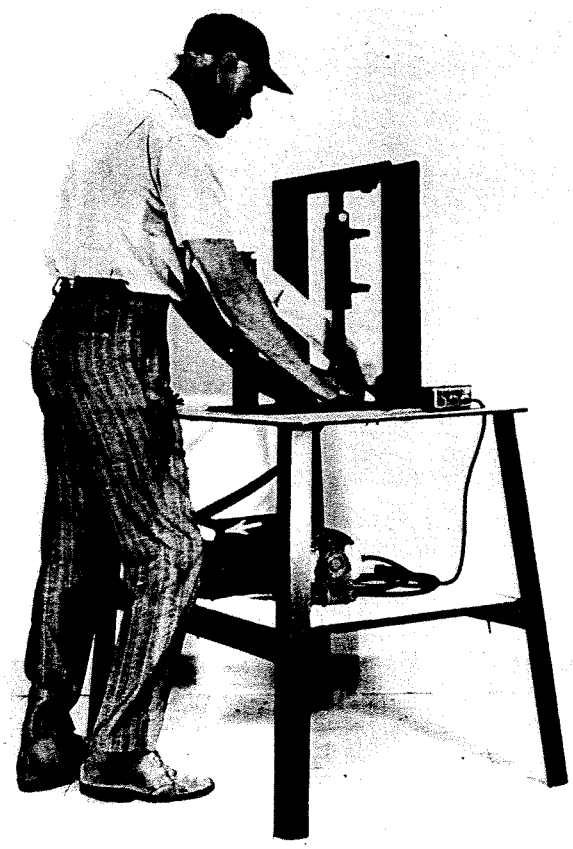

Figure 3.--The hydraulic pine cone cutter is activated when the operator depresses or lifts the control lever (arrow) with his knee.

OPERATION

The operator centers a cone longitudinally on the table top under the knife. He steadies the cone with both hands while he starts the knife's descent by pushing a lever upwards with his knee (fig. 3).[5] Once the cone is incised and held by the knife, the operator removes his hands from the cone and completes the bisection. Removing his knee from the lever stops the knife, and depressing the lever raises it.

Speed of the blade during cutting was of primary concern for safe operation. Too rapid a speed, such as might result from a pneumatic or solenoid power system, could endanger the operator's hands during cutting. The hydraulic system moves the knife blade through the cone at a speed of 1.9 inches

[5]On our prototype hydraulic cutter, the lever was secured to the top of the table and operated by hand, but this left just one hand for steadying the cone and proved unsatisfactory. Our prototype also had angle-iron guides designed to center the cone, but these were rarely used and finally eliminated.

per second, with the forward edge of the blade moving at 5.5 inches per second. At this speed, the operator may easily stop the blade at any point along its movement. About 8 seconds are required to pick up a cone, bisect it, and return the knife blade to its upward position.

The hydraulic cone cutter readily bisects mature cones of slash pine or longleaf pine whether the scales are opened or closed. It has been used to bisect over 4,000 mature cones without undue fatigue of the operators. The cost of materials needed to build this cutter, assuming a price of 18¢ per pound for steel and including a piece of S. A. E. .01 oil-hardened steel for the knife blade, would be about $170, and approximately 20 man-hours were required to assemble it. In comparison, the materials needed to construct the foot-operated model of DeBarr and Proveaux[4] would cost about $37 and require about the same number of man-hours for assembly. Both these cone cutters effectively bisect cones for determination of insect-caused seed losses; however, the additional cost of the hydraulic cone cutter appears to be warranted when large numbers of cones are to be cut.

C. W. Fatzinger, Entomologist
and
M. T. Proveaux, Instrument Maker

Naval Stores and Timber Production Laboratory
Olustee, Florida