Paper No. 987031
An ASAE Meeting Presentation

EXPERIENCES SPREADING ORGANIC SOLID WASTES ON FOREST LAND

by

J. H. Wilhoit, Associate Professor
Q. Ling, Research Associate
Agricultural Engineering Department

L. J. Samuelson
School of Forestry

Auburn University, Alabama 36849

Written for presentation at the
1998 ASAE Annual International Meeting
Sponsored by ASAE

Orlando, Florida
July 11-16, 1998

Summary: This paper reviews experiences spreading organic solid wastes on forest land over the past six years. Presented are some of the first-ever reported results on tree growth responses from fertilizing pine trees with poultry litter, spreader distribution pattern results for spreading in a pine plantation stand, and a discussion of equipment-related experiences spreading poultry litter, fly ash, and wood ash. A list of conclusions/recommendations relating to forest fertilization with poultry litter, site selection and conditions, and equipment is also presented.

Keywords:
Poultry litter, organic solid wastes, land application, forestry, forest operations

The author(s) is solely responsible for the content of this technical presentation. The technical presentation does not necessarily reflect the official position of ASAE, and its printing and distribution does not constitute an endorsement of views which may be expressed.

Technical presentations are not subject to the formal peer review process by ASAE editorial committees; therefore, they are not to be presented as refereed publications.

Quotation from this work should state that it is from a presentation made by (name of author) at the (listed) ASAE meeting.

EXAMPLE — From Author's Last Name, Initials. "Title of Presentation." Presented at the Date and Title of meeting, Paper No. X. ASAE, 2950 Niles Road, St. Joseph, MI 49085-9659 USA.

For information about securing permission to reprint or reproduce a technical presentation, please address inquiries to ASAE.

ASAE, 2950 Niles Rd., St. Joseph, MI 49085-9659 USA
Voice: 616.429.0300 FAX: 616.429.3852 E-Mail: <hq@asae.org>

Experiences Spreading Organic Solid Wastes on Forest Land

by

John H. Wilhoit, Qingyue Ling, and Lisa J. Samuelson

INTRODUCTION

In the southeastern United States, vast amounts of organic solid wastes are generated by two of the largest industries in the region, poultry and forestry. Many of these organic solid waste materials have significant nutrient or neutralizing value, but they are a challenge to utilize or dispose of because of the shear volume that is produced and the bulkiness of the material. Poultry litter is valued as a fertilizer and soil amendment for agricultural land, and it is typically applied to pasture land. But high application rates are common because poultry production tends to be concentrated in small areas and transportation costs limit the distance that the bulky litter can be hauled economically (Weaver and Souder, 1990). As a result, excess nutrients from poultry litter, especially phosphorous, are becoming a water-quality concern in poultry producing areas. Paper mill wastes typically have significant neutralizing value, and sometimes contain beneficial nutrients as well. But most paper mill wastes are landfilled, at considerable cost, because of the materials handling difficulties associated with land applying such large quantities of the bulky materials.

Forest land application is promising as a disposal alternative for some of these waste materials. In many areas of the South, there is more forest land than agricultural land. In the case of poultry wastes, forest land can extend the amount of land available for land application, thereby helping to reduce the concentration of nutrients, while benefitting tree growth at the same time. For paper mill wastes, forest land utilization is attractive because forest products companies have the possibility of using their own land for waste disposal.

We began investigating the use of poultry litter for fertilizing pine forest land in Alabama in 1992, prompted by concerns about disposing of the large quantity of poultry litter generated by the expanding poultry industry in the state. Field plots were established in Cullman County, a major center for the poultry industry in Alabama, and an investigation was conducted focusing on operational aspects of spreading poultry litter on forest land, tree growth responses, and environmental impacts from poultry litter fertilization. Since that time, we have do more work spreading organic solid wastes such as poultry litter and wood ash on forest land, concentrating on machinery and operational aspects. In 1994 we conducted a study broadcasting wood and fly ash in a pine plantation stand, evaluating spreader performance in terms of application rate, swath width, and uniformity (Wilhoit and Ling, 1996). In 1996, we spread poultry

litter on forest industry land in southern Alabama as part of a demonstration project sponsored by the Natural Resource Conservation Service (NRCS). In 1997, we did additional work as part of the NRCS demonstration project, spreading poultry litter and paper mill sludge on forest industry land in eastern Alabama.

This paper reviews our experiences spreading organic solid wastes on forest land over the past six years. Included in the review are some of the first-ever reported results on tree growth responses from fertilizing pine trees with poultry litter, spreader distribution pattern results for spreading in a pine plantation stand, and a discussion of equipment-related experiences spreading poultry litter, fly ash, and wood ash. Based on these experiences, a list of conclusions/recommendations relating to forest fertilization with poultry litter, site selection and conditions, and equipment is also presented.

EXPERIENCES IN CULLMAN COUNTY

Methods

There were two separate experiments in the Cullman County study, one applying poultry litter to newly planted pine seedlings in an old field (established winter of 1992) and the other applying litter to mid-rotation aged pine trees that had recently been thinned (plots established spring, 1993). For the seedling study, loblolly pine seedlings were machine-planted on a 6 ft by 6 ft spacing. Treatments for the seedling study included control, 2, 4, and 8 ton/acre poultry litter, fertilizer (matched approximately to the nutrient content of 2 ton/acre litter), and 2 ton/acre poultry litter with intensive weed control. Treatments were replicated four time using a randomized complete block design. Treatment plots were 0.10 acre in size with a 0.05 acre measurement plot in the center. A 33 ft buffer strip was left between treatment plots. The entire field was sprayed with the herbicide Oust a couple of months after planting, to knock back the grass growing in the field. Intensive weed control plots were sprayed with Round-Up about three weeks after treatment application, and again about one and a half months later. They were sprayed two more times during the summer of the second growing season.

The stand used for the mid-rotation age study was a loblolly pine plantation on an upland site planted in 1974 and thinned in 1992. The study included 2, 4, and 8 ton/acre poultry litter, fertilizer, and control treatments. Treatments were replicated three time using a randomized complete block design. Blocking was done based on soils and aspect. Treatment plots were 0.25 acre in size with a 0.10 acre measurement plot in the center. Buffer strips at least 66 ft wide were left between treatment plots.

For the seedling study, pretreatment seedling measurements of

ground line diameter and height were taken soon after the seedlings were planted. The same measurements were taken again in the early spring after the first and second growing seasons. For the mid-rotation age study, pretreatment measurements included dbh on all trees within the measurement plots, and diameter at 17 ft and total height on five trees selected from each measurement plot. The same measurements were taken again after the first and second growing seasons following treatment application. The results for both studies were analyzed statistically using SAS with co-variate adjustment for initial tree characteristics.

Results

The seedling results for the first and second growing seasons are shown in Table 1. After the first growing season, the increases in ground line diameters of the control, fertilizer, and intensive weed control treatments were significantly higher than those of the three poultry litter treatments. By the end of the second growing season, the diameter increases for the three non-poultry litter treatments were significantly higher than those of the three poultry litter treatments, and the diameter increase for the intensive weed control treatment was significantly higher than that of all the other treatments. The height results are similar to the diameter results. After one growing season, the height increase for the 8 ton/acre treatment was significantly lower than all of the other treatments except the 2 ton/acre treatment. By the end of the second growing season, the height increases for the three non-poultry litter treatments were significantly greater than those of the poultry litter treatments. The height increase for the intensive weed control treatment was the greatest of all, but it was not significantly greater than those of the fertilizer or control treatments.

The seedling results for both diameter and height indicate that the poultry litter had a detrimental effect on seedling growth the first two years. Given that the growth for the control treatment was as good, or nearly so, as that for the fertilizer and intensive weed control treatments, and that the growth for the intensive weed control plots was highest of all, it seems that the detrimental effect of the poultry litter was probably due to increased competition. For some reason, the poultry litter seems to have benefitted competing grasses and weeds more than the commercial fertilizer did. It may have been due to a mulching effect, or because of slower nutrient release by the poultry litter. Seedling survival figures give further indication of the effect of the poultry litter. The percent survival after two years was lowest for the 8 ton/acre treatment, at 68%, compared to the other treatments with survival ranging from 72 to 82%.

The mid-rotation age results for the first and second growing seasons are shown in Table 2. After the first growing season, dbh increases for the 8 ton/acre litter and fertilizer treatments were significantly higher than for the control and the two lower rate litter treatments. By the end of the second growing season, the dbh increases for the 8 ton/acre litter and fertilizer treatments were significantly higher than for the other treatments, and the increases for the 4 ton/acre litter and control treatments were significantly higher than for the 2 ton/acre treatment as well. For the diameter at 17 ft and height, there were no significant differences among the

treatments after the first or the second growing seasons. The increases in both parameters were highest for the 8 ton/acre litter treatments, however. The lack of statistical significance may reflect the much smaller sample size for both parameters (5 trees per plot versus an average of 29 trees per plot for dbh). In the case of height, a high level of measurement uncertainty probably had an effect as well. Some of the tree height measurements decreased in succeeding years, indicating measurement errors, and the overall height increase over two growing seasons was lower than would be expected even with no fertilization.

The mid-rotation age trees did respond favorably to the poultry litter, at least at the higher rate, which produced a growth response as high as that of the fertilizer treatment. The nutrient content of this poultry litter treatment was considerably higher than that of the fertilizer treatment, indicating that a substantial portion of the nutrients (or at least the nitrogen) in the poultry litter was not available for utilization by the trees. We do not know if the cause of this is a physical loss of nutrients from the plots, volatization or ammonification of the nitrogen, or other possible soil processes. It is possible that the growth response from the poultry litter would have been greater over a longer time period, but we were not able to obtain data to check longer term tree growth responses because the stand was clearcut.

Experiences With Equipment

The litter was applied to the seedling plots using a drop applicator that we developed at Auburn specifically for plot work with poultry litter (Wilhoit et al., 1994a). The drop applicator, shown in Figure 1, can apply litter and other organic solid wastes at a uniform rate across a 5.5 ft wide swath. For the mid-rotation aged plots, we put together a specialized forestry spreader that consisted of a horizontal spinner-type spreader mounted on the back of a Franklin Pack-A-Back forwarder (Figures 2 and 3). A forwarder is a machine used for timber harvesting that has a knuckleboom loader and racks on the back for carrying logs up off the ground. Our primary rational for using the forwarder was that we could mount clam shell buckets on the end of the knuckleboom so that it would be a self-loading machine, thus eliminating the need for a separate machine for loading in the woods. The forwarder/spreader combination did not work very well for a number of reasons. The forwarder that was available to us was fairly old and not in very good working order. There were other problems due to some limitations of the concept itself. Loading operations were slow, partly due to poor visibility because the back of the spreader box blocked the operator's view. The knuckleboom and clamshell bucket was ungainly, and it was tedious to get it properly placed on top of the spreader box so that it was out of the way during spreader operations. The machine had a high center-of-gravity, because the spreader box and knuckleboom with clamshell buckets were mounted so high, making stability a concern on our site which was uneven and steep in places.

FOREST SPREADING PERFORMANCE EVALUATION

Since doing the work in Cullman County, we have continued doing some work spreading organic solid wastes on forest land. In 1994, we used the forwarder/spreader unit to evaluate spreader performance broadcasting wood and fly ash in a thinned pine plantation stand (Wilhoit and Ling, 1996). The materials were spread at two conveyor speeds, and the results were analyzed for application rate and spreading uniformity, as indicated by coefficient of variation (CV), at different simulated swath widths. The arrangement of collection pans used in the spreader distribution pattern tests is shown in Figure 4.

Spreader uniformity was generally poor in comparison to standards for spreading fertilizer, as indicated by CV values greater than 20%. Less uniform spread patterns should be more acceptable when spreading waste materials such as wood and fly ash, however. Uniformity results were inconsistent from one trial to the next, primarily due to the nonhomogeneous nature of the materials. Better uniformities were consistently achieved at both narrow (20 to 23 ft) and wide (36 to 43 ft) simulated swath widths, however, a trend that could give important flexibility in spreading operations in terms of application rate and spacing. At the higher conveyor speed, fairly high application rates were achieved with fly ash, which was dry and uniform in consistency. The wood ash, which was wet and mud-like in consistency, could only be spread satisfactorily at a lower conveyor speed/application rate. For the operating conditions used in these tests, estimated costs (for spreading only) at an application rate of 4.5 ton/acre ranged from \$1.03 per yd^3 at a spreader utilization rate of 67% to \$2.06 per yd^3 at a spreader utilization rate of 33%. The fact that utilization rate is primarily a function of loading and travel time requirements points out the importance of careful planning for minimizing spreading costs.

FOREST SPREADING DEMONSTRATION PROJECTS

More recently, we have been involved with the Natural Resource Conservation Service (NRCS) spreading poultry litter on forest industry land in south Alabama as part of demonstration projects. In the spring of 1996, we spread litter in a newly thinned pine plantation stand owned by Union Camp, near Chapman, Alabama. In the spring of 1997, we spread poultry litter and paper mill sludge in a newly thinned pine plantation stand owned by Mead near Crawford, Alabama. For these spreading operat based on our past experiences, we changed our approach as far as spreading machinery. We put the spreader box back on the trailer chassis that it originally came with, added shielding to better protect the spreader from the rough operating conditions in the

forest, and pulled the spreader using four-wheel drive tractors. At the first site, the tractor used was a dedicated forestry tractor, with a fully enclosed cab with forestry shielding package (Figure 5). At the second site, the tractor used was a standard agricultural tractor with a front-end loader that Mead regularly used for site preparation work (Figure 6).

The pull-type spreader and tractor worked well. It had fairly good maneuverability within the woods, an important consideration for forest spreading operations. Note that maneuverability will be better if the tractor pulling the spreader does not have a front-end loader. The spreader was narrow enough that it could go in between tree rows planted on 10 ft centers, although maneuverability was better when operating the spreader on take-out rows (entire rows removed during thinning operations). Transportability is good with a pull-type spreader, since the spreader can be pulled to the site with a truck and the tractor can usually be transported on a moderate size trailer (the forwarder/spreader required an 18 wheel tractor-trailer rig for transport, and was actually over-size for that). It is important to have heavy duty tires on the spreader, because the woods are tough on tires. There are a lot of stumps and branches on a thinned plantation site, even though it looks fairly clean. Also, the spreader should have at least two axles, and wide floatation tires. There are usually some soft spots in the woods, and a fully loaded spreader is very heavy, so it is best to have as much tire contact area as possible for better floatation.

At both sites, field plots were established for examining the influence of fertilization with poultry litter (and paper mill sludge at the Mead site). Analysis of data collected at the Union Camp site following the first two growing seasons showed results similar to those of the Cullman County study, with significant stem diameter growth and foliar nutrient responses from both the higher poultry litter application rate (4 ton/acre) and fertilizer treatments, but not from the lower poultry litter application rate (2 ton/ac). At the Mead site, growth measurements will not be collected until after the second growing season, so no growth response results are available yet. However, crowns were noticeably greener and denser for all treatments (except the control) during the first growing season. Weed growth (fireweed) was also noted to be very lush in the poultry litter plots during the first growing season. Studies have shown that weed seed is not present in the litter (Zublena et al., 1994), so the poultry litter must be stimulating the growth of this specific weed in some way.

CONCLUSIONS

Based on our experiences over the past six years, we have learned a great deal related to spreading organic solid wastes on forest land. The following is a list of conclusions/recommendations concerning forest fertilization with poultry litter, site selection and conditions, and forest spreading equipment.

Related to forest fertilization with poultry litter:

1. Newly planted seedlings should not be fertilized with poultry litter without intensive weed control, because the added nutrients can stimulate competition growth so much that it will be detrimental to the seedlings.

2. In pine plantation stands that have been thinned, significant tree growth response can be expected from high application rates of poultry litter.

3. Lower application rates of poultry litter did not increase tree growth in thinned pine plantation stands, at least not during the first two growing seasons.

4. Poultry litter applied to forest stands may stimulate the growth of some weeds such as fireweed.

Related to site conditions and selection:

1. Only spread in plantation pine following a thinning, when fertilization is recommended and when access for spreading equipment is best.

2. Choose good sites, that are not too steep or rough, and that have uniform tree rows and spacing.

3. A stand with trees planted in rows spaced 10 ft apart is preferable to one with 8 ft row spacing, because the spreader can fit between the rows. If the trees are planted on 8 ft rows, spreading will have to be done on take-out rows.

4. If possible, thinning should be done with spreading in mind, so that appropriately spaced take-out rows and cross corridors can be left. They are critical for satisfactory maneuvering of the spreader within the stand.

5. Consider spreading swath width in determining what thinn regime to use (3rd-row, 4th-row, or 5th-row). Spreading operations will be more efficient if the spreader can be driven down take-out rows.

Related to equipment:

1. Use a four-wheel drive tractor, preferably with added protection for woods work.

2. The pull spreader should be at least a double axle, and have high-floatation tires, to maximize tire contact area.

3. Spreader tires should have a high ply rating to stand up to tough conditions working in the woods.

4. Do not use a tractor with a front-end loader for pulling the spreader, because it cuts down on maneuverability.

5. If a horizontal-spinner type spreader is used, the spinners should be hydraulically-powered, and operated at maximum speed, to maximize swath width. Swath widths up to 40 ft are possible with this type of spreader. If greater swath widths are needed, a different type of spreader will have to be used (Wilhoit et al., 1994b)

REFERENCES

Weaver, W. D. and G. H. Souder. 1990. Feasibility and economics of transporting poultry litter. p. 123-130. IN: Proceedings of the 1990 National Poultry Waste Management Symposium.

Wilhoit, J. H. and Q. Ling. 1996. Spreader performance evaluation for land application of wood and fly ash. Journal of Environmental Quality 25(5):945-950.

Wilhoit, J. H., J. S. Bannon, R. R. Duffield, and Q. Ling. 1994a. Development and evaluation of a drop applicator for poultry litter. Applied Engineering in Agriculture 10(6):777-782.

Wilhoit, J. H., Q. Ling, and S Aygarn. 1994b. Equipment for spreading organic solid wastes on forest land. Journal of Forest Engineering 6(1):51-56

Zublena, J.P., C.C. Mitchell, J.T. Parsons, R.H. Walker, T.A. Carter, and P. Shaw. 1994. Perception and viability of weed seed in poultry litter and litter by-products. Agron. Abstr. p. 33. Am. Soc. Agron., Madison, WI.

Table 1. Growth Response from poultry litter applied to pine seedlings, Cullman County, AL, 1992.

Treatment	Diameter at ground level increment (in.)		Height increment (in.)	
	Year 1	Year 2	Year 1	Year 2
Control	0.29 bc*	0.76 b	9.45 b	35.1 c
2 ton/acre poultry litter	0.23 a	0.66 a	9.23 b	29.9 ab
4 ton/acre poultry litter	0.23 a	0.66 a	10.2 c	31.6 b
8 ton/acre poultry litter	0.23 a	0.63 a	8.54 a	28.6 a
fertilizer	0.27 b	0.80 b	10.0 c	34.7 c
2 ton/acre litter with weed control	0.30 c	1.00 c	9.62 c	36.4 c

* Different letters within a column indicate significant differences between means ($P<0.05$).

Table 2. Growth response from poultry litter applied to mid-rotation age pine trees, Cullman County, AL 1993.

Treatment	DBH increment (in.)		Diameter @ 17 ft. increment (in.)		Tree height increment (ft.)	
	Year 1	Year 2	Year 1	Year 2	Year 1	Year 2
Control	0.20 a*	0.33 a	0.15 a	0.39 a	1.80 a	0.47 a
2 ton/acre poultry litter	0.22 a	0.39 b	0.16 a	0.35 a	0.85 a	1.22 a
4 ton/acre poultry acre	0.19 a	0.36 c	0.22 a	0.49 a	1.67 a	1.67 a
8 ton/acre poultry litter	0.22 b	0.49 c	0.29 a	0.59 a	2.67 a	2.07 a
fertilizer	0.27 bc	0.46 c	0.21 a	0.47 a	1.04 a	1.92 a

* Different letters within a column indicate significant differences between means ($P<0.05$).

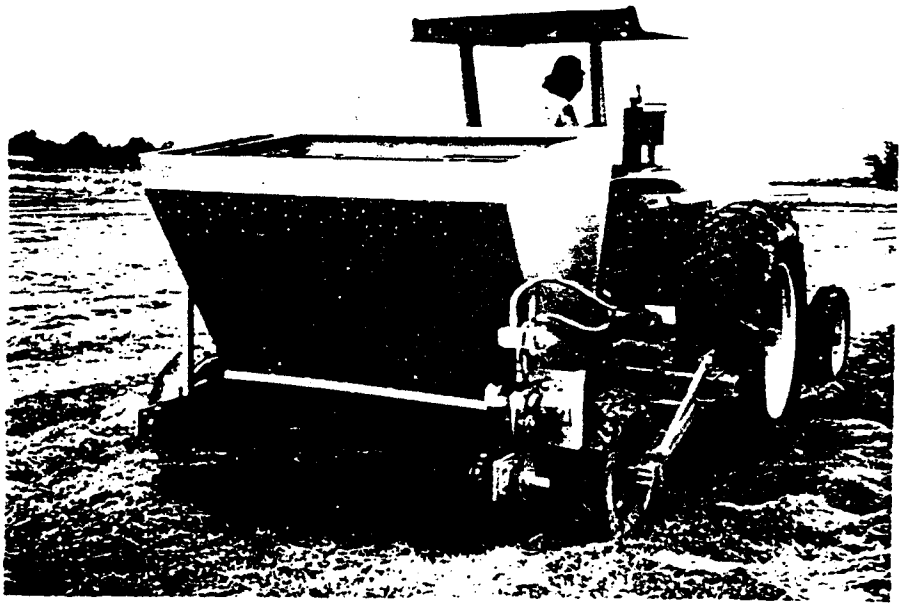

Figure 1. Drop applicator for research plot work with poultry litter.

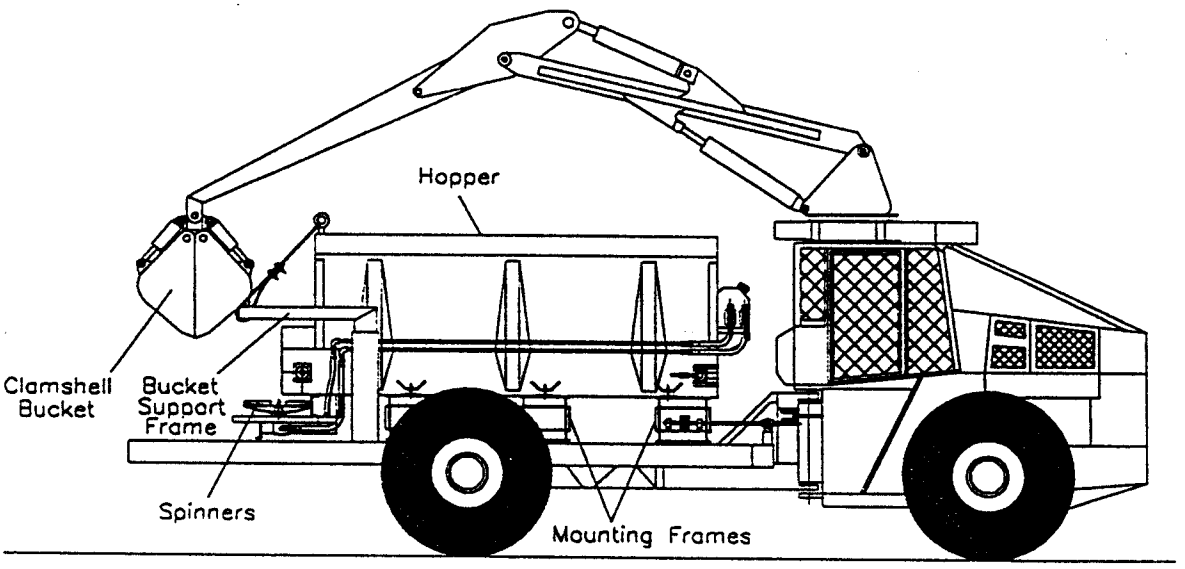

Figure 2. Schematic of spreader mounted on forwarder.

Figure 3. Spreader/forwarder in the woods.

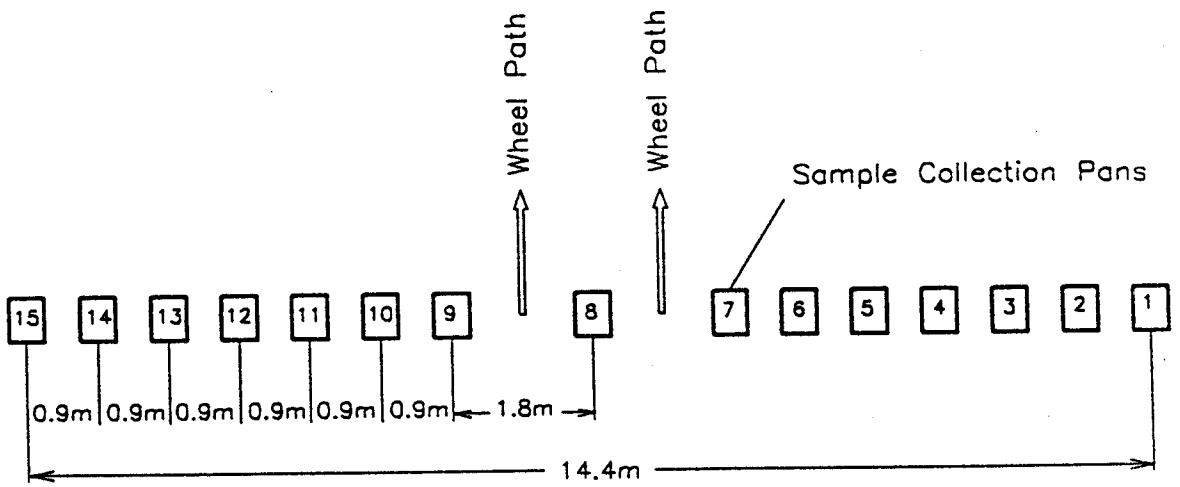

Figure 4. Arrangement of collection pans for spreader distribution pattern tests.

Figure 5. Spreader pulled by tractor outfitted for forestry work.

Figure 6. Spreader pulled by tractor with front-end loader.