Miller, J.H.; Zhongze, Qiu; Sirois, D.L. 1985. Ground sprayer designs for forestry applications. In: Proceedings, 38th Annual Meeting Southern Weed Science Society; 1985 January 14-16; Houston, TX. [Champaign, IL]: Southern Weed Science Society. 271-282.

GROUND SPRAYER DESIGNS FOR FORESTRY APPLICATIONS[1/].

James H. Miller, USDA Forest Service; Qiu Zhongze, Visiting Professor from Nanjing Forestry Technical College, Nanjing, China; Donald Sirois, USDA Forest Service, G. W. Andrews Forestry Sciences Laboratory, Southern Forest Experiment Station, Auburn University, AL 36849.

ABSTRACT

Three herbicide spraying systems were designed, constructed, and field tested in cooperation with the USDA Forest Service, Georgia Forestry Commission, and Scott Paper Company. One system was designed to mount on wildland tree planting machines for applying banded treatments for herbaceous weed control. This system consisted of a top mounted 50-gal tank and a small electric pump along with a regulator and strainer. The second spraying system was mounted on a small crawler tractor and was used for spraying low brush and kudzu. A 250 gal space-saver poly-tank, a hydraulicly driven pump and a cluster nozzle were the main components. The third system was skidder-mounted and used a 600 gal mild steel tank, a gasoline powered pump, and 22-tip nozzle manifold for high production work. Both tractor-mounted sprayers injected herbicides into the water stream relative to ground speed to yield uniform application rates. Application costs appear to be favorable for treatment of small tracts, sensitive areas, and around the margins of aerially treated units.

INTRODUCTION

Ground application of herbicides was once prevalant in southern forests. Mistblowers commonly applied 2,4,5-T for hardwood control before this herbicide was banned for forestry use in 1979. With the advent and development of new herbicides, ground applications are once again being tried (3). The need to bring smaller tracts into production through herbicide treatments and the unrelenting spread of vegetative pests such as kudzu and Japanese honeysuckle dictates that supplements to aerial applications must be developed. In an

---

[1/] Partial funding for parts of this research and development was provided by the Georgia Forestry Commission. The qualified assistance of the following foresters during field trials are gratefully acknowledged: Kerry Thomas, formerly with Georgia Forestry Commission; Martha Loyd and Donna Cassese, Scott Paper Company. The assistance in design and construction by Floyd Ethridge, Scott Paper Company, is also gratefully acknowledged.

Discussion of herbicides in this paper does not constitute recommendation of their use or imply that uses discussed here are registered. If herbicides are handled, applied, or disposed of improperly, there is potential for hazards to the applicators, off-site plants, and environment. Herbicides should be used only when needed and should be handled safely. Follow the directions and heed all precautions on the container label.

Use of trade names is for the reader's information and convenience. Use in these studies does not constitute official endorsement or approval by the U.S. Department of Agriculture to the exclusion of any other suitable product.

attempt to lower application cost some herbicide application systems have been attached to planting machines (1,2) and shears (4) to accomplish vegetation control simultaneously with other operations. Thus, continued development of both innovative and reliable systems are needed that can accomplish vegetation control with the lowest application costs and maximum environmental safety. Three new systems were designed, constructed, and tested for forest applications: a planting machine attachment, a crawler-tractor mounted sprayer, and a skidder-mounted system.

Planter Sprayer

The design criteria for a spraying system to fit tree planting machines that have a protective canopy (wildland planting machines) were as follows:

1. The system should fit and be mounted solely on the planting machine for ease of tractor detachment.

2. Operation should essentially be by the planter, thus requiring ease of control and maintenance.

3. For safety of the planter, no unshielded hoses or valves would be placed inside the planting compartment.

4. The herbicide tank should have sufficient capacity that seedling refill and loading times coincide--this will minimize scheduled delays.

5. Application of the herbicide must be after all soil disturbance is finished, to ensure maximum effectiveness of non-incorporated preemergent herbicides.

6. The spray band width should be adjustable, and the spray nozzle(s) should be mounted as close as possible to the ground to minimize wind influence.

It was decided to use Oust® Weed Killer as the primary herbicide, sometimes in combination with Velpar® L. Since Oust is a dispersible granule it was originally thought that it would be necessary to incorporate a means of agitation to keep Oust in suspension.

Figure 1 shows the first prototype mounted on a Reynolds Planter™, Figure 2 illustrates the flow diagram and Table 1 lists the component parts. A 50-gal nylon tank was mounted on top of the planting machine. The top of the planting compartment is the most frequently available and protected space on the commonly used tree planting machines. The tank (a fuel tank) comes with baffles, a 4-inch fill-port, and threaded plugs for attaching the suction and return hoses. The hoses were attached to copper tubing, which on the suction side extended down to near the bottom of a sump. The slosh in the tank, caused by the roll of the planting machine, while even planting prepared sites, demands both the baffles and a sump or stilling well to ensure a constant uptake of the spray mixture. The sump could be bolted with a gasket to the bottom of the tank. It appeared that there may be sufficient agitation to keep Oust in suspension due to a natural mixing by the constant machine roll. A stainless-steel wire attached to a cork float that extended through a brass hose-barb sleeve in the top of the tank, was calibrated for use as a gauge.

A suction strainer was placed in line before the 12 volt, 3 gpm, electric diaphram pump to protect the pump from grit in the water. An on-off switch for the pump was placed in the planting compartment, along with a switch to a two-way solenoid valve that controlled agitation. The return line was "on" when the solenoid was closed, which maintained agitation of the herbicide by pumping. A manual pressure-control valve, with a gauge, was next in line to control pressure to the spray nozzle. A person had to walk beside the planting machine to adjust the pressure regulator during the start-up phase.

A single "floodjet" nozzle (TK5), mounted horizontally, provided the spray pattern, which was judged to be 50 percent more concentrated in the center one-third of the band. The resulting weed-control showed that a more even distribution or a pattern of spray that was more concentrated on the outer edges of the band would be more beneficial. Thus, it was decided to use a two-nozzle mount during future tests. Also, a 45-degree mounting of the floodjet nozzle will be tested for a more even pattern. On the nozzle mounting bracket, two bolts and slotted holes permitted height adjustment that allowed for band-width adjustment. The nozzle body extends from a large spring through which the hose is threaded, giving flexibility in case downed wood strikes the mount.

A contractor who used the system to plant and treat 180 acres had no complaints and charged nothing extra for herbicide application, since little additional time and labor were required. The total cost of the parts for the spray system attachment was $603. A list of manufacturers and dealers where parts can be purchased is given in Table 2 for the reader's convenience.

High winds are a major problem with banded spraying during February and March planting; these result in loss of band integrity and herbicide effectiveness. The use of low pressure (18 psi) and the addition of a drift retardant agent can aid in alleviating this problem, but in winds gusting to 20 mph, spraying becomes ineffective and should be discontinued with the present design.

Crawler-Tractor Sprayer

This system is designed to mount on a John Deere 450™ crawler tractor and integrates a herbicide injection system that is controlled by ground speed and a water pumping system powered by the tractor's hydraulics. Figure 3 shows an expanded view of the sprayer assembly and Figure 4 gives details of the pumping systems. Ground speed is monitored by a magnetic sensor that detects the passing of the drive sprocket teeth. The sensor is encased within and shielded by square tubing, and attaches to the tractor by existing mounting bolt holes. This design has been free of problems. The sensor is connected to a control box with integrated circuits that regulates the speed of a positive-displacement electric herbicide pump. The rate and swath-width of the herbicide to be applied are keyed into the control box. Calibration is performed by a timed-bucket test while the control box is in the "prime" mode and is adjusted with one poteniometer screw. Herbicide is injected into the water stream relative to ground speed; water and herbicide are then mixed by a centrifugal pump. After passing through the second of two strainers and a globe valve for pressure control (20 psi), the spray mixture can be applied

either with a cluster nozzle on a height-and-angle adjustable mount (Fig. 5) or with a handgun. Varying the size of the cluster-nozzle tips permits a wide range of volumes from 10 to 50 GPA that can be selected for application.

A 45-foot swath can be maintained at a ground speed of 2 to 3 mph. This permits treatment of up to 12 acres per hour, allowing for one 15-minute refill of the 250-gallon tank. The components for the spraying system cost approximately $3350 (Table 3) and construction costs were about $3000.

The major problems encountered after approximately 300 hours of use have been the hazards of backing the equipment by inexperienced applicators in heavily wooded tracts, which can result in the plumbing on the sprayer being knocked loose. The presence of numerous stumps and logs causes severe travel restrictions on speed when using a crawler tractor and places much stress on the mounting hitch and the operator. The mounting hitch has been reenforced and the attachment plate of the tank frame will be upgraded to a heavier gauge steel in the future. To maintain proper machine balance, it was necessary to add a large amount of heavy metal to the front of the tractor. Thus, due to the stress and counter balance problems, perhaps a 200 gal tank would be more suitable for small JD-450-size tractors.

Skidder Sprayer

A spraying system was designed to mount on a Franklin 595 Site Preparation Skidder (31,380 lb gr. wt.). The fairlead and winch were removed and the fuel tank was moved to the forward section. A 600-gal water tank was constructed of mild steel to fit on top of the rear frame with a sump area between the frame beam members. The tank had multiple lengthwise and crosswise baffles. The filling port was attached to a manhole cover positioned over the sump, outport, and drain assembly to provide access for cleaning.

The pumping-spraying system fits on a rear-mounted platform and integrates a dual-pumping herbicide injection system (two 15 gal tanks), a drift-retardant injection system (one 5 gal tank), and a low-pressure gasoline-powered water pumping system (Figs. 6 and 7). Two herbicides can be injected at different rates into the water stream relative to ground speed. A radar unit is used to monitor the ground speed and is shielded and mounted at a critical angle (37° $\pm$ 2°) between the front and rear tires, below the operator's cab. A small electric pump is used to inject a drift retardant into the water stream. The pump can be regulated and calibrated using both a rheostat and needle value. Because of extensive baffling in the 600-gal water tank, the drift retardant could not be mixed with the water because agitation for complete mixing would be needed in each compartment.

A gasoline-powered, belt-driven, centrifugal water pump was fitted with an electric clutch, a solenoid throttle, and an on-off switch for maximum remote control in the cab. A high-capacity strainer is used on the suction side of the pump for pump protection because of the high-grit content frequently encounted in water used for forestry herbicide applications. Pressure regulation is accomplished with an electrically operated butterfly value that is adjusted with a toggle-switch in the cab. Four two-way solenoid values provided in-cab selection of flow to any of the three nozzle manifolds employed for broadcast applications or to a handgun. The three nozzle manifolds for broadcast applications were previously described by Sage et. al. (3).

The total cost of this spray unit was $12,600--including parts (Table 4) and labor, but excluding design work. Much of the cost of parts is the herbicide injection system that should ultimately save on herbicide costs and provide uniform applications. This saving can be achieved if care is made in "keying-in" the appropriate rates and swath width (including overlaps), and good ground guidance is used. Our experience has shown that experienced ground guides with 40-foot fiberglass poles are the most effective guidance to date. Further development in guidance systems is needed to eliminate the necessity for using two or three men as ground guides.

The skidder sprayer was used to operationally treat 164 acres on four tracts that had been initially machine prepared. The cost of application was approximately $11/acre; this did not include labor overhead or depreciation on the equipment. Travel speeds during application averaged 4 to 6 mph with a maximum of 8 mph. At these speeds, the 60 ft swath width was reduced to 45 ft. The average treatment rate was 32 acres/PMH (Productive Machine Hour).

Problems encountered during field testing showed that one herbicide tank should be approximately 50 gal rather than 15 gal to be adequate for when two different herbicides are being simultaneously applied. This would minimize refills of the higher rate herbicide. A high-volume pump is required on the nurse tanker to minimize valuable refill time. A clean water source or a series of small mesh strainers are imperative to minimize clogging and the cleaning of the 22 nozzles. Because available drift retardants are not homogenous solutions, variable amounts of these adjuvents were being injected into the water stream. Jar-tests show that commonly available retardant agents can be mixed consistently with the herbicide and metered through the herbicide pumping system simultaneously with the herbicide. This would eliminate the need for the additional injection system.

Further information and full-size drawings of the spray systems will be provided on request.

LITERATURE CITED

1. Garner, J.W., and H.L. Olinger. 1982. Modification of a tree planter to include herbicide application. Tree Planters' Notes 33(3):13-14.

2. Gilbert, R.C.A. 1972. Sprayer equipped planter applies herbicide at planting time. Tree Planters' Notes 23(2):8-10.

3. Sage, R.D., D.L. Dowdell, and J. Stephenson. 1984. Large scale-ground applied-Velpar® L Weed Killer herbicide for forestry site preparation. So. Weed Sci. Soc. 37:156-159.

4. Vidrine, C.G. Machine application of herbicides for hardwood sprout control - a concept. In: Proceedings, third biennial southern silvicultural research conference; 1984 November 7-8; Atlanta, GA. (in press).

Table 1. Planter-sprayer component parts and costs.

Component	Part No.	Supplier	Cost
50-gal tank (nylon)		Extended Range Products	$270
Electric Pump 3 gpm	200	Flo-jet	85
Two-way solenoid value	144	Spraying Systems Co.	78
Strainer, 50 mesh	124-NY	Spraying Systems Co.	22
Pressure relief/regulating value	8460	Spraying Systems Co.	22
Pressure gauge	4090k52	McMaster-Carr	28
Nozzle	TK5	Spraying Systems Co.	2
Brass fittings			96
		TOTAL	$603

Table 2. Addresses of manufacturers and dealers of sprayer components.

Company	Address	Telephone
Ace Pumps	P. O. Box 13187 Memphis, Tennessee 38113	901-948-8514
Cibolo Manufacturing Co., Inc.	P. O. Box 156 Jourdanton, Texas 78026	512-769-2717
Extended Range Products	750 Shore Rd, Apt 3G Longbeach, New York 11561	516-889-0519
Fisher Scientific	2775 Pacific Drive P. O. Box 829 Norcross, Georgia 30091	404-449-5050
Flot-jet	12 Morgan Irvine, CA 92714	714-859-4945
McMaster-Carr	P. O. Box 4355 Chicago, Illinois 60680	312-833-0300
Raven Plastics Div.	P. O. Box 1007 Sioux Falls, South Dakota 57117	605-336-2750
Spraying Systems Co.	North Avenue at Schmale Road Wheaton, Illinois 60187	312-665-5000
TRW Eagle Controls Div.	1405 W. Fullerton Ave Addison, Illinois 60101	312-495-4180

Table 3. Crawler-sprayer component parts and costs.

Component	Part No.	Supplier	Cost
Water/herbicide Pumping-Spraying System			
1. Tank, 200 or 250 gal, Poly space-saver	10897	Raven	$295
2. Pump, (centrifugal) and hydraulic motor (open center)	FMC-HYD-210	Ace	285
3. Strainer, 20 mesh (before pump)	9793K24	McMaster-Carr	20
4. Strainer, 50 mesh (after pump)	124-NY	Spraying Systems Co.	25
5. Valve, globe 1 inch NPT	4600K15	McMaster-Carr	35
6. Valve, ball 1-1/4 inch NPT	4726K39	McMaster-Carr	20
7. Valve, ball 3/4 inch NPT	4726K12	McMaster-Carr	10
8. Nozzle, cluster	5880-3/4 -2TOC40, 20 or 10	Spraying Systems Co.	60
			$750
Herbicide Dispensing System:			
9. Automated injection system with magnetic sensor	60	Cibolo Mfg. Co.	2500
10. 2 ea. poly tanks (carboys), herbicide, 13 gal each	02-961C	Fisher Scientific	100
			$2600
		TOTAL	$3350

Table 4. Skidder-sprayer component parts and costs.

Component	Part No.	Supplier	Cost
Herbicide Dispensing System			
1. Dual-pumping automated injection system	60II	Cibolo Mfg. Co.	$3220
2. Radar unit		TRW Eagle Control Div.	650
3. 2, 15 gal, cone-bottom cylindrical (vertical) tanks with mounting frames	10849	Raven Plastics Div.	250
			$4120
Drift-retardant Injection System			
4. Pump, electric diaphram, 3 gpm	2000	Flo-jet	85
5. Rheostat			25
6. Needle valve			3
			$ 113
Water/herbicide Pumping-Spraying System			
7. Tank, 600 gal, with baffles			900
8. Ball valve 1-1/4 inch	4726k39	McMaster-Carr	20
9. Strainer, 1-1/4 inch, 20 mesh	9793k24	McMaster-Carr	51
10. Pump, centrifugal	FMC-MAG	Ace Pumps	614
a. Engine 5 hp, 206 cc			
b. Electric clutch			
c. Solenoid accelerator			
11. Strainer, 50 Mesh	124-NY	Spraying Systems Co.	33
12. Electric Pressure Regulating value	244	Spraying Systems Co.	60
13. 2 ea Pressure Gauges	4090k52	McMaster-Carr	56
14. 4, two-way solenoid valves	144	Spraying Systems Co.	300
15. 2, 9-port nozzle manifolds			140
16. 1, 4-port nozzle manifolds			30
17. Handgun	43L	Spraying Systems Co.	60
18. Fittings, clamps, and hoses			180
			2444
		TOTAL	$6677

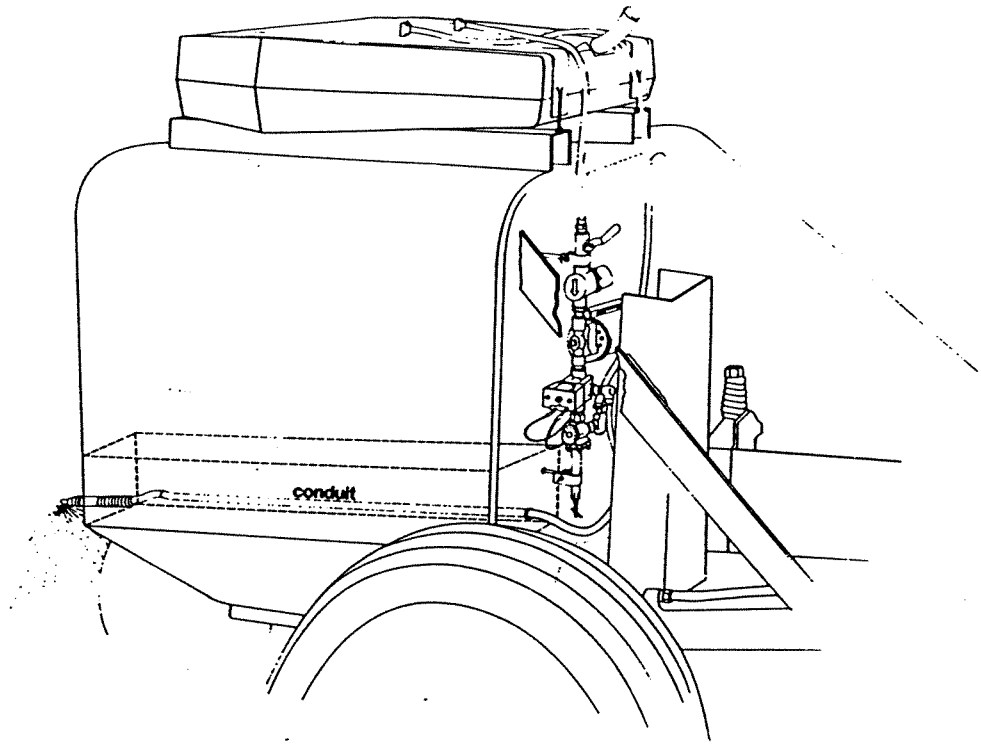

Figure 1. Sprayer attachment for wildland tree planting machines used to band apply herbicides.

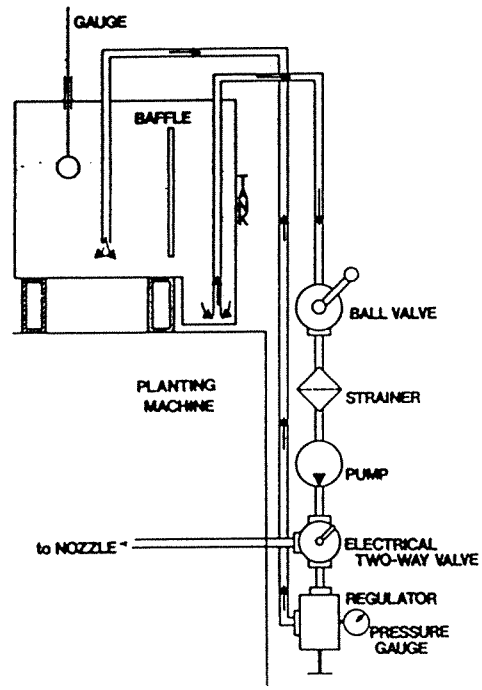

Figure 2. Schematic flow diagram of a spray system for mounting on wildland tree planting machines.

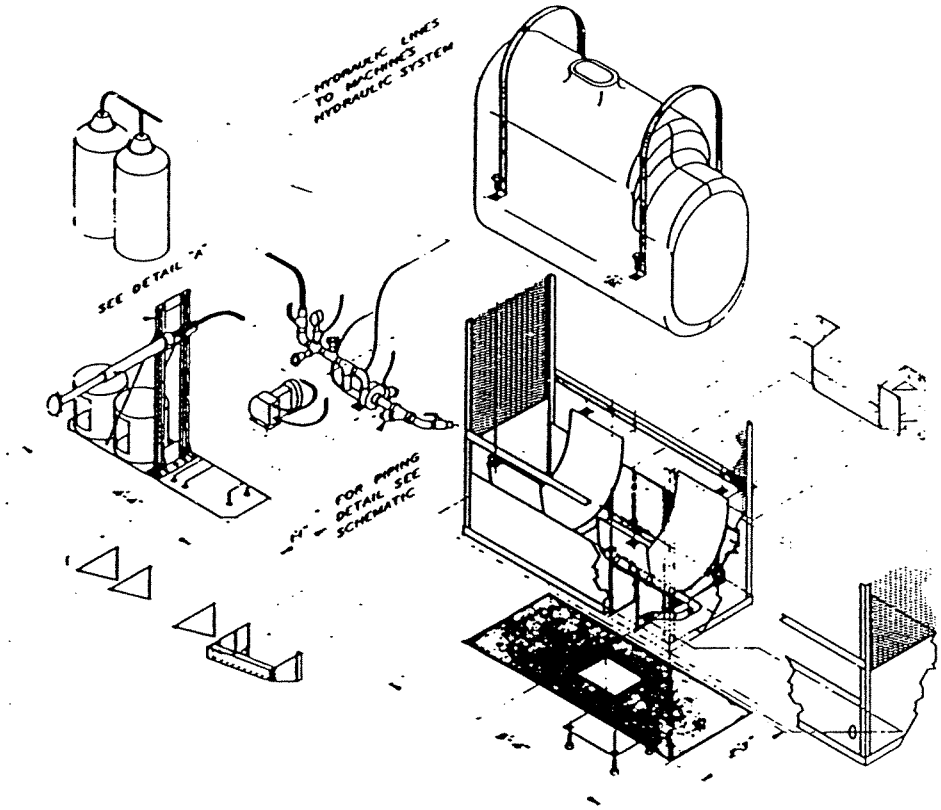

Figure 3. Expanded isometric view of a spray system that mounts on a crawler tractor.

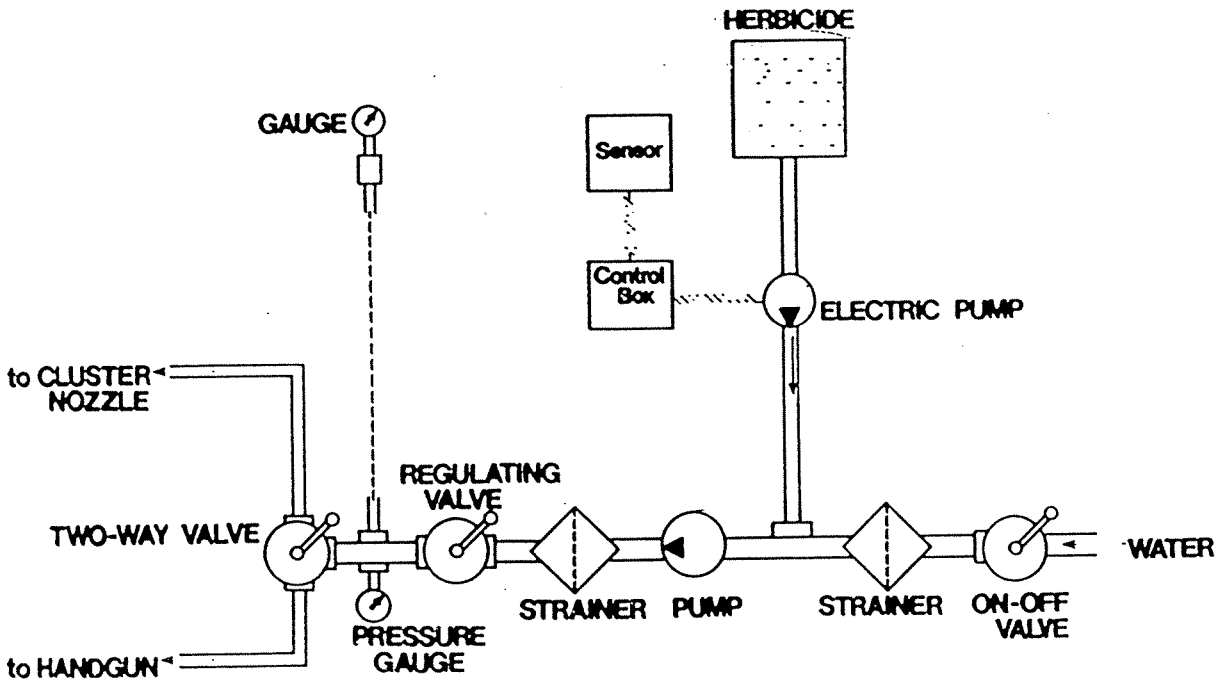

Figure 4. Schematic flow diagram for the crawler-tractor sprayer pumping systems.

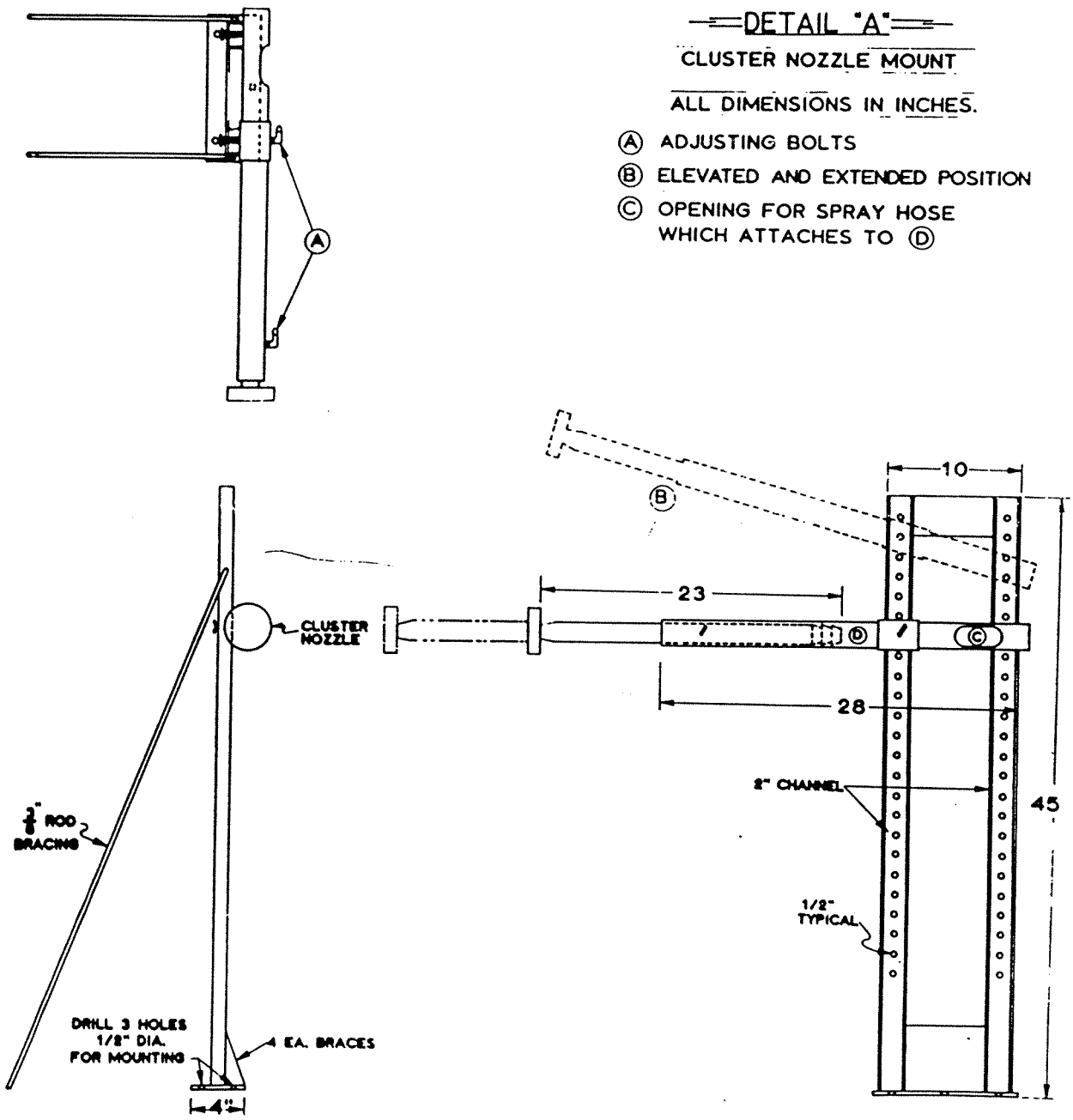

Figure 5. Adjustable mounting assembly for a cluster nozzle.

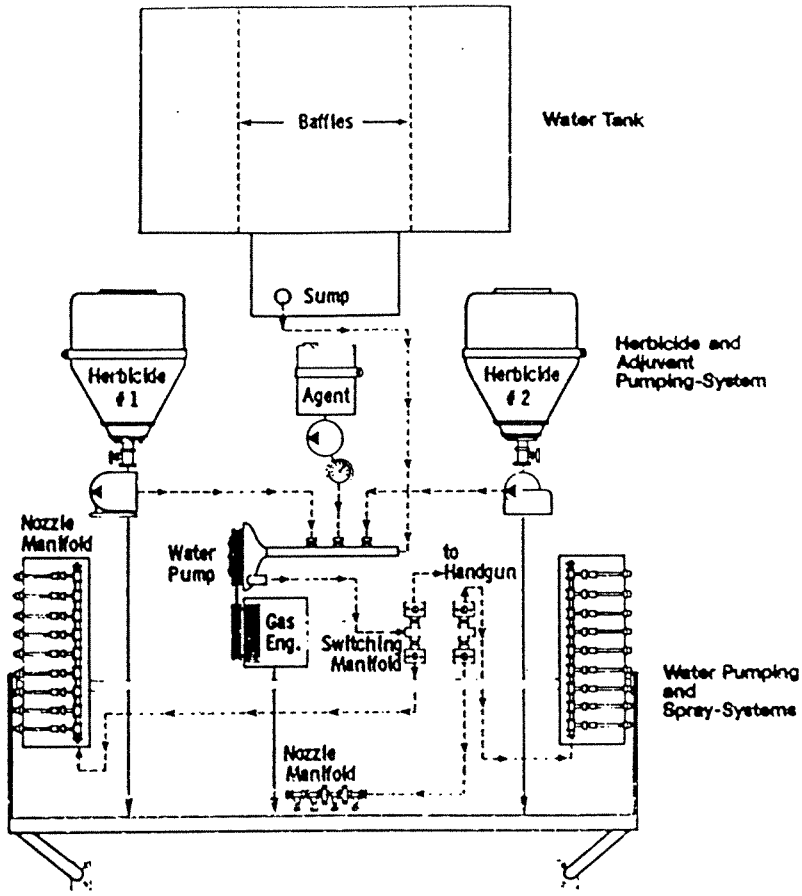

Figure 6. Vertically expanded view of a skidder-mounted spray system.

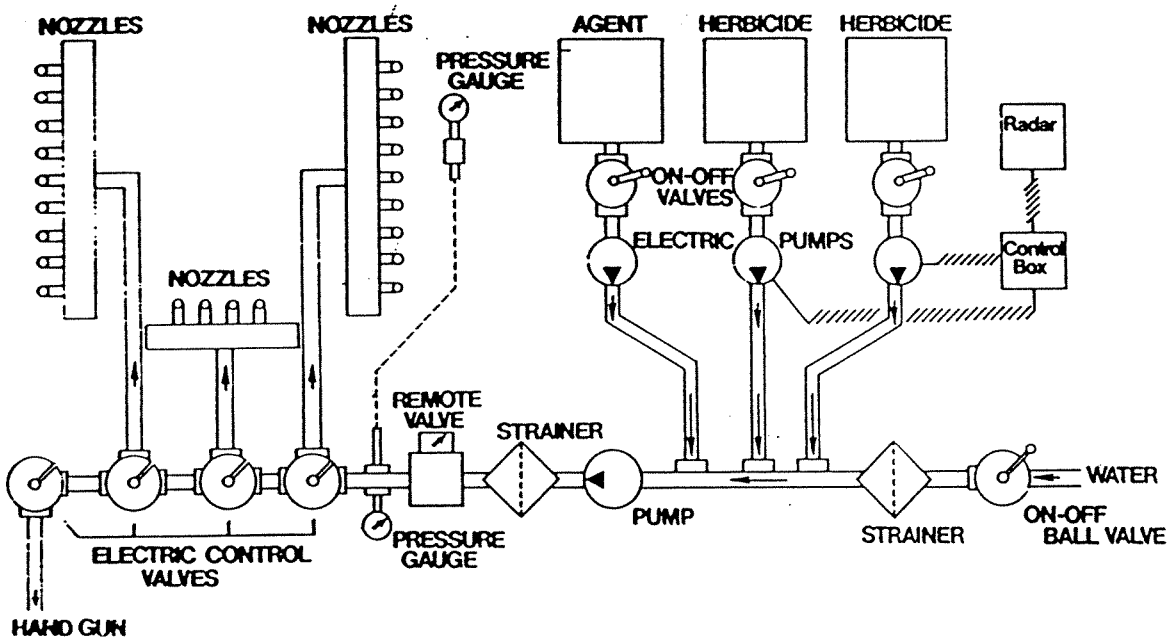

Figure 7. Schematic flow diagram for a skidder-mounted spray system.