Reprinted from

Forest Ecology and Management

Forest Ecology and Management 114 (1999) 405–420

An unconventional approach to ecosystem unit classification in western North Carolina, USA

W. Henry McNab[a,*], Sara A. Browning[b], Steven A. Simon[c], Penelope E. Fouts[d]

[a] *USDA Forest Service, Southern Research Station, 1577 Brevard Road, Asheville NC 28806, USA*
[b] *USDA Forest Service, Nantahala National Forest, 90 Sloan Road, Franklin NC 28734, USA*
[c] *USDA Forest Service, National Forests in NC, P.O. Box 2750, Asheville NC 28802, USA*
[d] *Robbinsville High School, P.O. Box 833, Robbinsville NC 28771, USA*

ELSEVIER

Forest Ecology and Management

Aims and scope. *Forest Ecology and Management* publishes scientific articles concerned with forest management and conservation, and in particular the application of biological, ecological and social knowledge to the management of man-made and natural forests. The scope of the journal includes all forest ecosystems of the world. A refereeing process ensures the quality and international interest of the manuscripts accepted for publication. The journal aims to encourage communication between scientists in disparate fields who share a common interest in ecology and natural-resource management, and to bridge the gap between research workers and forest managers in the field to the benefit of both. The journal should be of interest to research workers, managers and policy makers in forestry, natural resources, ecological conservation and related fields.

FOUNDING EDITOR
Laurence L. Roche, Murroe, Ireland

EDITORS-IN-CHIEF
For the Americas, Australia, New Zealand and the Pacific:
R.F. Fisher
Department of Forest Science
Texas A&M University
College Station, TX 77843-2135, USA

For the rest of the world:
G.M.J. Mohren
Forest Production Ecology Group
Department of Vegetation Ecology
DLO-Institute for Forestry and Nature Research
P.O. Box 23
6700 AA Wageningen, The Netherlands

BOOK REVIEWS EDITOR
Margaret R. Gale
School of Forestry and Wood Products
Michigan Technological University
1400 Townsend Drive
Houghton, MI 49931, USA

EDITORIAL ADVISORY BOARD
G. Abrahamsen, Agricultural University of Norway, Ås, Norway
R. Alfaro, Canadian Forestry Service, Victoria, B.C., Canada
F. Andersson, Swedish University of Agricultural Sciences, Uppsala, Sweden
P.M.S. Ashton, Yale University, New Haven, USA
P. Attiwill, University of Melbourne, Parkville, Vic., Australia
J. Boyle, Oregon State University, Corvallis, USA
S. Brown, US Environmental Protection Agency, Corvallis, USA
I. Burke, Colorado State University, Fort Collins, CO, USA
J.C. Calvo, Institute of Technology, Cartago, Costa Rica
R.-J. Chen, University of Hong Kong, Pokfulan Road, Hong Kong
J.D. Deans, Institute of Terrestrial Ecology, Penicuik, Midlothian, UK
R.M. DeGraaf, USDA Forest Service, University of Massachusetts, Amherst, MA, USA
S. Diamandis, Forest Research Institute, Thessaloniki, Greece
D.P. Dykstra, CIFOR, Jakarta, Indonesia
E.P. Farrell, University College Dublin, Dublin, Ireland
P.M. Fearnside, Instituto Nacional de Pesquisas da Amazonia-INPA, Manaus-Amazonas, Brazil
P.H. Freer-Smith, Forestry Commission, Farnham, UK
O. Garcia, ENGREF, Nancy, France
D. Gilmore, Canadian Forest Product Ltd., Alberta, Canada
R.A. Goyer, Louisiana State University, Baton Rouge, LA, USA
J.B. Hall, University College of North Wales, Bangor, UK
F. Houllier, Campus International de Baillarguet, Laboratoire Associe de Modelisation des Plantes (AMAP), Montpellier, France
B.M Kumar, Kerala Agricultural University, Kerala, India
J.P. Lassoie, Cornell University, Ithaca, NY, USA
J.N. Long, Utah State University, Logan, UT, USA
A.E. Lugo, International Institute of Tropical Forestry, Rio Piedras, PR, USA
J.A. Maghembe, SADCC / ICRAF Agroforestry Project, Zomba, Malawi
F. Makeschin, Institut für Bodenkunde und Standortslehre, Tharandt, Germany
D.C. Malcolm, University of Edinburgh, Edingburgh, UK
E. Mälkönen, Finnish Forest Research Institute, Vantaa, Finland
M.A.R. Nahuz, Instituto de Pesquisas Tecnologicas, São Paulo, SP, Brazil
R. Päivinen, European Forestry Institute, Joensuu, Finland
S.G. Pallardy, University of Missouri, Columbia, MO, USA
R.F. Powers, Pacific Southwest Research Station, Redding, CA, USA
T. Pukkala, University of Joensuu, Joensuu, Finland
F.E. Putz, University of Florida, Gainesville, FL, USA
L. Rasmussen, RISO, Roskilde, Denmark
D.D. Reed, Michigan Technological University, Houghton, MI, USA
R. Sands, University of Canterbury, Christchurch, NZ
J.A. Stanturf, Stoneville, MS, USA
O. Sziklai, University of British Columbia, Vancouver, B.C., Canada
J.R. Toliver, USDA Forest Service, Washington, DC, USA
K. von Weissenberg, University of Helsinki, Helsinki, Finland
D. Whitehead, Manaaki Whenua Landacre Research, Lincoln, New Zealand

Publication information: *Forest Ecology and Management* (ISSN 0378-1127). For 1999 volumes 111–122 are scheduled for publication. Subscription prices are available upon request from the Publisher. Subscriptions are accepted on a prepaid basis only and are entered on a calendar year basis. Issues are sent by surface mail except to the following countries where air delivery via SAL mail is ensured: Argentina, Australia, Brazil, Canada, Hong Kong, India, Israel, Japan, Malaysia, Mexico, New Zealand, Pakistan, PR China, Singapore, South Africa, South Korea, Taiwan, Thailand, USA. For all other countries airmail rates are available on request. Claims for missing issues should be made within six months of our publication (mailing) date.

Orders, claims, and product enquiries: please contact the Customer Support Department at the Regional Sales Office nearest you:
New York: Elsevier Science, PO Box 945, New York, NY 10159-0945, USA; Tel. (+1) (212) 633 3730, [toll free number for North American customers: 1-888-4ES-INFO (437-4636)]; fax: (+1) (212) 633 3680; e-mail usinfo-f@elsevier.com
Amsterdam: Elsevier Science, PO Box 211, 1000 AE Amsterdam, The Netherlands; Tel.: (+31) 20 485-3757; fax: (+31) 20 485 3432; e-mail nlinfo-f@elsevier.nl
Tokyo: Elsevier Science, 9-15, Higashi-Azabu 1-chome, Minato-ku, Tokyo 106, Japan; Tel. (+81) (3) 5561 5033; fax (+81) (3) 5561 5047; e-mail: info@elsevier.co.jp
Singapore: Elsevier Science, No. 1 Temasek Avenue, #17-01 Millenia Tower, Singapore 039192; Tel. (+65) 434 3727; fax: (+65) 337 2230; e-mail: asiainfo@elsevier.com.sg
Rio de Janeiro: Elsevier Science, Rua Sete de Setembro 111/16 Andar, 20050-002 Centro, Rio de Janeiro – RJ, Brazil; phone: (+55) (21) 509 5340; fax: (+55) (21) 507 1991; e-mail: elsevier@campus.com.br [Note (Latin America): for orders, claims and help desk information, please contact the Regional Sales Office in New York as listed above]

ELSEVIER

Forest Ecology and Management 114 (1999) 405–420

Forest Ecology and Management

An unconventional approach to ecosystem unit classification in western North Carolina, USA

W. Henry McNab[a,*], Sara A. Browning[b], Steven A. Simon[c], Penelope E. Fouts[d]

[a] USDA Forest Service, Southern Research Station, 1577 Brevard Road, Asheville NC 28806, USA
[b] USDA Forest Service, Nantahala National Forest, 90 Sloan Road, Franklin NC 28734, USA
[c] USDA Forest Service, National Forests in NC, P.O. Box 2750, Asheville NC 28802, USA
[d] Robbinsville High School, P.O. Box 833, Robbinsville NC 28771, USA

Abstract

We used an unconventional combination of data transformation and multivariate analyses to reduce subjectivity in identification of ecosystem units in a mountainous region of western North Carolina, USA. Vegetative cover and environmental variables were measured on 79 stratified, randomly located, 0.1 ha sample plots in a 4000 ha watershed. Binary transformation of percent cover followed by direct and indirect ordination indicated the 185 inventoried species were associated primarily with soil A-horizon thickness, soil base saturation, and aspect. Redundant cluster analyses, consisting of divisive and agglomerative methods for multivariate classification of core plots, followed by selective discriminant analysis of remaining non-core plots, indicated that the continuum of vegetation and environment could be grouped into five ecosystem units. Approximately 20 herbaceous, shrubs, and tree species and several soil and topographic variables were highly significant discriminators of ecosystem units. We also demonstrated that redundant cluster analysis may be used to subdivide ecosystem units into subunits of uniform understory composition and associated environment. Validation and refinement of classification units, linkage with faunal biological components, and arrangement into landscape areas suitable for resource management is needed before field application. © 1999 Elsevier Science B.V. All rights reserved.

Keywords: Presence–absence transformation; TWINSPAN; Detrended correspondence analysis; Canonical correspondence analysis; CANOCO; Discriminant analysis

1. Introduction

The Wine Spring Creek watershed, located in the Nantahala National Forest of western North Carolina, is the focus of intensive investigations to gain a better understanding of ecological relationships for purposes of ecosystem management. The Wine Spring Creek ecosystem management project was begun in 1993 to establish a scientific basis for management of physical and biological resources (Swank et al., 1994). Working in the nearby Great Smoky Mountains National Park, Whittaker (1956) established that vegetation patterns in this region consist of species responding individually to a complex of temperature and moisture gradients associated primarily with elevation and landform. Classification of this continuum of vegetation and environment into ecosystem units – "units that can be distinguished by major differences in physiography, soils, and vegetation" (Barnes et al., 1982) and recur in a predictable pattern on the land-

*Corresponding author.

0378-1127/99/$ – see front matter © 1999 Elsevier Science B.V. All rights reserved.
PII: S0378-1127(98)00371-5

scape – is needed for planning and resource management guidelines (Kimmins, 1991).

Others have studied selected portions of the Wine Spring Creek drainage to determine vegetation and environment relationships. DeLapp (1978) described the extent and characteristics of high elevation northern red oak (*Quercus rubra*) stands. Hedman and VanLear (1995) reported that riparian vegetation in the vicinity intergraded between mixed mesophytic and eastern hemlock (*Tsuga canadensis*) forests with understories typically dominated by rhododendron (*Rhododendron maximum*). In unpublished reports, Hedman (1993) qualitatively described riparian vegetation along major streams and Baker and VanLear (Undtd) characterized stream-side areas dominated by rhododendron. In a preliminary reconnaissance-type classification, based only on arborescent vegetation and topographic variables, McNab and Browning (1993) identified six ecological types associated with three perceived moisture regimes in each of two altitudinal zones. Using this preliminary classification, Elliott and Hewitt (1997) reported on species diversity in the ecological-types characterized by vegetative communities dominated by an overstory of northern red oak and shrub understory of flame azalea (*Rhododendron calendulaceum*). Additional investigation should extend vegetation–site relationships to include all flora and soil variables.

Several classification studies using all flora and soil variables have also been conducted within a 70 km radius of the study area (Gattis, 1992; Moffat, 1993; Patterson, 1994), where climate, geology, soils, landforms, vegetation and disturbance mechanisms are generally similar. Classification units identified in these studies varied from 6 to 10, and only about half of the units agreed in composition among studies, even though field and analytical methodologies were similar. Since classification is primarily a subjective process (Sokal, 1974) it is uncertain if the unique units identified in each study are real, represent artifacts of the field data set resulting from sample plot location and techniques, or resulted from arbitrary decisions made during the analysis. Researchers are faced with many subjective decisions when conducting classification studies, beginning with field location of sample plots and method of quantifying vegetation. Data analysis brings a host of other decisions concerning not only the choice of legacy or contemporary multivariate techniques, but also seemingly mundane questions of rare species retention or exclusion (including definition of rare), recognition (and deletion) of outlier samples, and input data order (Tausch et al., 1995). These and other subjective decisions may cause other researchers using the same dataset to arrive at different results when conducting similar classification studies.

The primary objective of our study was to group the biological and physical components of the study area into relatively homogeneous ecosystem units based on widely used methods of multivariate analysis. Since the results of this study will probably provide a basis for hypothesis testing by researchers and may be applied to resource management by managers, we used conservative methodology for identifying ecosystem units. The risk in this approach is that a minor but real ecosystem unit may have been sampled but not detected in the analysis. However, we also reduce the possibility of identifying a false unit that is primarily an artifact of the dataset. A principal focus of this paper is the exploratory and unconventional use of a combination of multivariate classification methods to achieve objective, reproducible results for identifying portions of landscapes with similar ecological potential.

2. Site description and methods

2.1. Site description

The majority of this study was conducted in the Wine Spring Creek watershed (35°11′00″N, 83°36′30″W) and the remainder in the adjacent White Oak Creek watersheds of the Wayah Ranger District, Nantahala National Forest, NC. These watersheds cover about 4000 ha of the southern Nantahala Range. Altitudes range from 915 m, where the principal stream (Wine Spring Creek) enters Nantahala Lake, to 1655 m at Wine Spring Bald. Slope gradient averages 12% between Nantahala Lake and Wine Spring Bald, a horizontal distance of 6100 m. Landforms consist of broadly rounded ridges, valleys with steeply sloping sides and long connecting slopes.

Soil parent material primarily consists of metasedimentary and metamorphic rocks. The Wehutty and Copperhill Formations – metagraywacke, mica schist, and metaconglomerate – form the lower

one-third of the study area from 915 to about 1250 m elevation. Geologic substrate of the upper two-third of the study area primarily consists of an unnamed metamorphic formation of biotite gneiss interlayered with biotite, granite, garnet gneiss, and amphibolite (Yurkovich and Wilson, undtd.). Soils on both geologic formations and below about 1450 m elevation are 50–90 cm deep and mapped as complexes classified as coarse–loamy, mixed, mesic Typic Dystrochrepts (Thomas, 1996). At elevations above about 1450 m soil solums are 50–125 cm deep and classified as coarse–loamy, mixed, frigid Typic Haplumbrepts.

Precipitation averages about 1800 mm annually, with a monthly minimum (100 mm) in October and maximum (200 mm) in March. Mean monthly temperature ranges from 0.5°C in January to 21.3°C during July (Swift, 1993). The predominant overstory canopy averages >25 m in height and consists of cold-deciduous, broadleaf arborescent species dominated by oaks (*Quercus spp.*).

The USDA Forest Service acquired the watershed beginning in 1912 after it had been commercially logged (W. Culpepper, pers. commun., 1995). Previous settlement, cultivation, and land clearing were restricted on small areas at low elevations and on gentle slopes near Nantahala Lake (Ayres and Ashe, 1905). Human-caused disturbances to the timber stands since 1912 have resulted from salvage of American chestnut (*Castanea dentata*) killed by blight (Woods and Shanks, 1959) and regeneration activities by the USDA Forest Service.

2.2. Sampling and methods

The study area was sampled by stratification of the two principal environmental factors that we hypothesized most affected vegetation: elevation and soil properties. Elevation was stratified into four zones: (1) <1,067 m, (2) 1067–1282 m, (3) 1282–1466 m, and (4) >1466 m; the number of plots in each zone was proportional to the strata areas: 5, 39, 45, and 11%, respectively. Soil mapping units were stratified into seven groups: soils formed in colluvium derived from (1) granite/gneiss, or (2) metasediments; soils formed in residuum from (3) granite/gneiss or (4) metasediments; and three single series consisting of (5) Porters, a widespread metasedimentary-derived soil, (6) Plott, a common gneiss/granite-derived soil, and (7) Wayah, a prevalent, high elevation-soil characterized by frigid temperature regime. Thomas (1996) describes properties of soils in the study area. The number of plots allocated to each soil group was also proportional to its area: 12, 4, 24, 12, 26, 10, and 10%, respectively.

Forest stands were grouped by age based on timber inventory records; only those greater than 80 years were eligible for sampling. Sample sites were located by overlaying a 200×200-dot grid on a 1/24,000-scale topographic map of the study area. Potential sample sites occurred on the map at the intersection of a row and column selected from a table of random numbers. The potential sample site was retained if the combination of elevation zone, soil group, and stand age was needed to satisfy the number of plots allocated to each stratum.

Each selected site was located in the field and sampled using a 0.1 ha (20×50 m) plot-oriented parallel with the contour and subdivided into ten 0.01 ha (10×10 m) modules. Environmental conditions were described by topography, soils, and geology. Topographic variables measured on each plot included: elevation (m), aspect (degrees azimuth), gradient (%), slope position, landform index, and terrain shape index. Thickness of the soil A-horizon was determined to the nearest inch (2.54 cm) and solum depth, usually to a maximum of 48 in (122 cm), was determined for taxonomic classification to the series level. A composite sample of the upper 6 in (15 cm) of the A-horizon was collected and analyzed by the North Carolina Soils Test Laboratory for humic matter (%), bulk density (g/cm^3), acidity factors (meq./100 cm^3), pH, base saturation (%), cation exchange capacity (CEC) (meq./100 cm^3), cation concentrations of Ca and Mg (expressed as % of CEC), and concentrations of P, K, Mn, Zn, and Cu (expressed as index values that range from 0 to 166). Geologic substrate was classified as gneiss/granite or metasedimentary from detailed geologic maps (Yurkovich and Wilson, undtd.). Logarithmic transformation was used for cation concentration (Palmer, 1993); aspect was transformed using the relationship of Beers et al. (1966). Values of pH were treated as if measured on an interval scale.

Vegetation at each sample site was measured using modified methods established by the Vegetation Survey of North Carolina (Peet et al., undtd.). All vegetations were identified to species, and abundance was

estimated by growth form on four modules of the main 0.1 ha plot. Trees (arborescent species) ≥4 in (10 cm) diameter at breast height (dbh) were measured for dbh to the nearest 0.1 in (0.25 cm) and average crown width to the nearest 5 ft (1.5 m) within the main 0.1 ha plot. Saplings (arborescent species 0.1–4 in (0.25–10 cm) dbh) and tall seedlings (arborescent species 1–4.5 ft (0.3–1.4 m) height) were counted by species and size classes on four 1/100 ac (0.0025 ha) plots located along the long axis of the main plot at interior intersections of 10×10 m modules. Small seedlings (arborescent species <1 ft (0.3 m) height) were counted by species and size class on four 1/1000 ac (0.00025 ha) plots nested within each 1/100 ac (0.0025 ha) plot. Other vegetation growth forms (club-mosses, ferns, herbs, shrubs, sedges, and vines) were inventoried by crown cover recorded in 10 classes: 1 (trace), 2 (0-1%), 3 (1–2%), 4 (2–5%), 5 (5–10%), 6 (10–25%), 7 (25–50%), 8 (50–75%), 9 (75–95%), and 10 (95–100%). An inventory of saplings, tall seedlings, and small seedlings by abundance was done to provide information on tree regeneration for forest management purposes. Vegetation nomenclature follows Radford et al. (1968).

Quantitative cover and abundance data were transformed to qualitative presence–absence values for multivariate classification analysis. Rarely reported in ecological literature of North America, this procedure has often produced results comparable with or superior to those obtained from cover-abundance values (Frenkel and Harrison, 1974; S. Jones, pers. commun., 1997). In a lone citation found for the southern Appalachian region, Moffat (1993) used binary transformation of cover data when detrended correspondence analysis indicated excessive beta diversity on the first axis. Although described in consulted ecological texts, situations calling for presence–absence transformation were omitted. Our reasons for using presence–absence follow:

1. Classification studies that establish relationship of species with environment do not require a measure of relative abundance;
2. Timing, severity, and effects of disturbance can create transitional conditions that may help or harm a few species and for which recovery time is unknown, such as historical gathering of ginseng (*Panax quinquefolium*) and ramps (*Allium tricoccum*), and response of vegetation released by American chestnut mortality;
3. Uniform weighting of all species can be achieved when comparing species with typically low numbers and small foliage area, such as pink lady slipper (*Cypripedium acaule*) and pipsissewa (*Chimaphila maculata*) to the relatively large crown area and abundance of most trees and shrubs;
4. Difficulties associated with combining arborescent seedling–sapling abundance data with cover of other vegetation growth forms can be avoided;
5. Conservative classification results are provided by reducing the likelihood of identifying a false ecosystem unit.

Williams et al. (1973) stated that "The qualitative/quantitative choice [for floristic data collection] has attracted much attention but little general agreement..." and applied both methods to complex rain-forest communities of >130 tree species with varying results. Strahler (1977) evaluated both continuous and binary methods in forests of Maryland, USA, and reported about the same results for identifying species associated with site factors.

2.3. Data analysis

The relationship between species and environmental variables was investigated by redundant indirect and direct ordinations to corroborate the importance of the major axes, as suggested by Ter Braak (1988). Detrended correspondence analysis (DCA) is perhaps the most widely used method of indirect vegetation ordination (Kent and Coker, 1995) and has been used in similar studies in this region of North Carolina and Georgia (Gattis, 1992; Moffat, 1993; Patterson, 1994). Direct ordination of species and environment was achieved with canonical correspondence analysis (CCA). CCA is a relatively new method in which the axes of a vegetative ordination are restricted to linear groupings of environmental variables. Direct ordination has several advantages over the older form of indirect ordination and is robust even when assumptions of multivariate normal data structure are violated (Palmer, 1993). Multiple regression was used to determine the proportion of variation of each ordination axis explained by environmental variables. Both DCA and CCA were made using CANOCO software (Ter

Braak, 1988). No sample plots were omitted from the analysis as outlier observations, no species were eliminated because of rarity, and a single order of data input was used.

To simplify the continuum of vegetation composition present in the study area and to aid our understanding of vegetation and environment relationships, plots with generally similar vegetation were classified into a few groups. Cluster analysis was used to reduce subjectivity associated with combining species responding individually to environment into discrete groups of plots that would partially define ecosystem units based on vegetation. Two types of hierarchical cluster analysis, TWINSPAN (Hill, 1979) and PROC CLUSTER (SAS, 1985), were used in redundant analyses of the same dataset to define core (Golden, 1981) clusters consisting of similarly classified plots. TWINSPAN uses a divisive method of cluster analysis that Gauch and Whittaker (1981) found widely useful. In PROC CLUSTER, Ward's method, also known as minimum variance clustering, was selected to compute distance between clusters. Ward's method is a widely used type of agglomerative cluster analysis reported as effective in several studies (Kent and Coker, 1995). Although many multivariate techniques are controversial, including DCA and TWINSPAN, it was beyond the scope of this study to compare various ordination and classification methods, which has been done elsewhere (Kent and Coker, 1995).

Since strengths and weaknesses are associated with each type of cluster analysis (Jongman et al., 1987), similarly classified plots by the two redundant analyses should define core clusters with a greater likelihood of including species that respond similarly to an associated set of environmental conditions. The stopping point of cluster formation was based on experience and set at the third level for TWINSPAN, which could produce up to eight clusters. An equivalent level for Ward's method was semi-partial R-squared of about 0.03. Plots not placed in the same core cluster by TWINSPAN and PROC CLUSTER were assigned to an existing cluster based on discriminant analysis of the environmental variables from the successfully classified core plots. No plots in the vegetation-based core clusters were reclassified even when the discriminant analysis based on environmental factors indicated a high probability of misclassification.

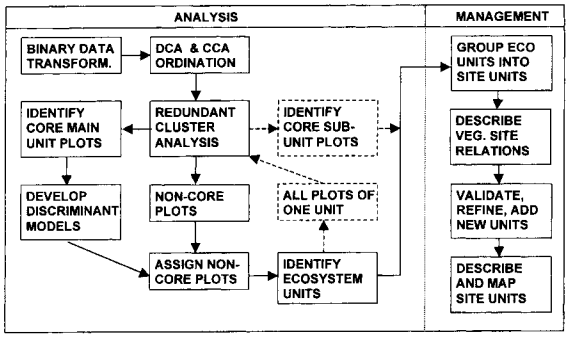

Fig. 1. Framework of analysis methodology used for the Wine Spring Creek study. Items on the right side of the vertical dotted line are relevant to management implications of results from this study and are not addressed. Activity boxes and arrows identified by dashed lines are associated with an unplanned division of an ecosystem unit into two subunits.

Groups consist of plots whose membership was based entirely on vegetation (cluster analysis) and other plots that were based only on environmental variables (discriminant analysis). PROC STEPDISC (SAS, 1985) was used to determine species and environmental variables significantly associated with the groups and the relative importance of these variables within each group. PROC DISCRIM (SAS, 1985) was used to determine the relative importance of each species and environmental variable for group identification and discrimination. PROC LOGISTIC (SAS, 1985) was used to develop a logistic response surface of the probability of occurrence of selected species based on significant environmental variables. The analysis framework is outlined in Fig. 1.

3. Results

Seventy-nine sample plots were established and 185 species were recorded in seven growth forms: 110 herbs, 32 trees, 17 shrubs, 12 ferns, six grasses, five vines, and three sedges. Red maple (*Acer rubrum*) was the most widespread species, occurring on 89% of all plots, followed by northern red oak (81%), rhododendron (77%), New York fern (*Thelypteris noveboracensis*) (75%), downy serviceberry (*Amelanchier arborea*) (72%), eastern hemlock (*Tsuga canadensis*) (67%), and fancy fern (*Dryopteris intermedia*) (66%).

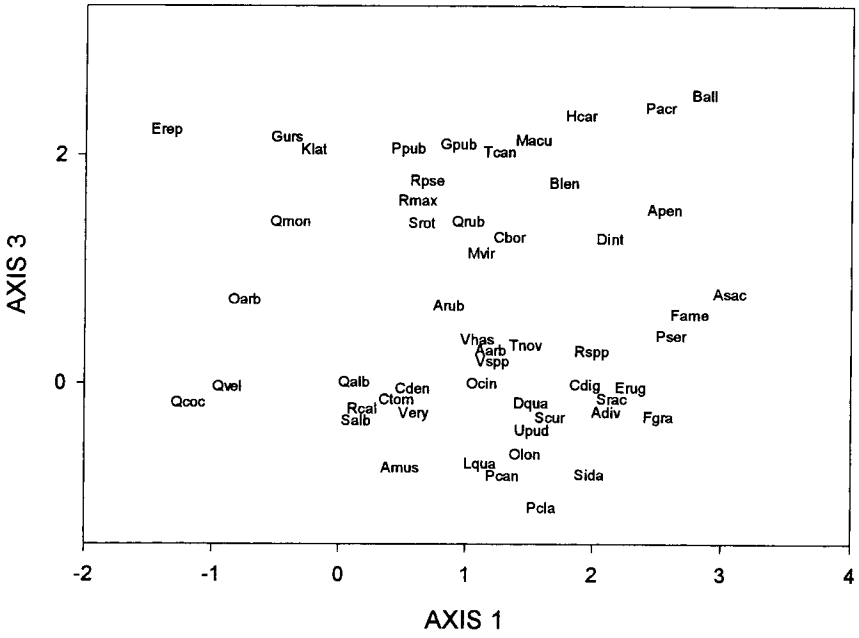

Fig. 2. DCA ordination of species occurring on >25% of sample plots in the Wine Spring Creek study area. Axes scale units are multiples of standard deviation. Species names are abbreviated by the first letter of the generic name and first three letters of the specific name as follows: *Acer pensylvanicum*, Apen; *A. rubrum*, Arub; *A. saccharum*, Asac; *Amelanchier arborea*, Aarb; *Amianthum muscaetoxicum*, Amus; *Aster divaricatus*, Adiv; *Betula allegheniensis*, Ball; *B. lenta*, Blen; *Carex digitalis*, Cdig; *Carya tomentosa*, Ctom; *Castanea dentata*, Cden; *Clintonia borealis*, Cbor; *Dioscorea quaternata*, Dqua; *Dryopteris intermedia*, Dint; *Epigea repens*, Erep; *Eupatorium rugosum*, Erug; *Fagus grandifolia*, Fgra; *Fraxinus americana*, Fame; *Gaylussacia ursina*, Gurs; *Goodyera pubescens*, Gpub; *Halesia carolina*, Hcar; *Kalmia latifolia*, Klat; *Lysimachia quadrifolia*, Lqua; *Magnolia acuminata*, Macu; *Medeola virginiana*, Mvir; *Osmunda cinnamomea*, Ocin; *Osmorhiza longistylis*, Olon; *Oxydendrum arboreum*, Oarb; *Panicum clandestrinum*, Pcla; *Polystichum acrostichiodes*, Pacr; *Potentilla canadensis*, Pcan; *Prunus serotina*, Pser; *Pyrularia pubera*, Ppub; *Quercus alba*, Qalb; *Q. coccinia*, Qcoc; *Q. montana*, Qmon; *Q. rubra*, Qrub; *Q. velutina*, Qvel; *Rhodendron calendulaceum*, Rcal; *R. maximum*, Rmax; *Robinia pseudoacacia*, Rpse; *Rubus spp*, Rspp; *Sasafras albidum*, Salb; *Smilacina racemosa*, Srac; *Smilax rotundifolia*, Srot; *Solidago curtsii*, Scur; *Solidago spp*, Sida; *Thelypteris noveboracensis*, Tnov; *Tsuga canadensis*, Tcan; *Uvularia pudica*, Upud; *Vaccinium erythrocarpum*, Very; *Viola hastata*, Vhas; *V. spp.*, Vspp. Plotting location of some species codes (Cden, Klat, Pcan, Salb, Srac, Vspp) was adjusted slightly to avoid overprinting.

Thirty-nine species (21%), mostly herbs, occurred only once in the dataset and 21 of these species occurred on a single plot.

3.1. DCA and CCA ordinations

In the DCA ordination, axis 2 was systematically related to axis 1 ($r=-0.56$, $p<0.0001$) and was omitted from interpretation (Hill, 1973). A satisfactory ordination of species was obtained with axes 1 and 3, which were uncorelated ($r=-0.05$, $p<0.68$) (Fig. 2). Axis 1 (horizontal) was interpreted primarily as a moisture gradient based on Whittaker's (1956) association of trees with implied-moisture regimes: species associated with xeric conditions, such as pitch pine (*Pinus rigida*), scarlet oak (*Q. coccinea*), and blackgum (*Nyssa sylvatica*), are placed on the left end and species associated with mesic sites, such as buckeye (*Aesculus flava*) and basswood (*Tilia heterophyla*) on the right end. Length of the first DCA axis for site scores (not shown) is slightly over 3 s.d., suggesting that sample sites at each end of the ordination will share some species (Jongman et al., 1987). Aspect and all soil variables except bulk density, pH, P, Cu, and solum thickness are highly correlated ($p<0.01$) with axis 1 (Table 1). All topographic variables except slope position are significantly ($p<0.01$) associated with axis 3. Eigenvalues for the four DCA axes are 0.368 for axis 1, 0.260 for axis 2, 0.131 for axis 3, and 0.100 for axis 4.

Table 1
Correlations (r) between axes of species and environmental variables from the detrended correspondence analysis (DCA) of data from Wine Spring Creek study area

Variable	Axis 1	Axis 2	Axis 3
Humic matter	0.38	−0.20	0.04
Bulk density	−0.01	−0.04	−0.15
Cation exchange capacity	0.36	−0.39	0.21
Base saturation	0.36	0.14	0.04
Acidity content	0.21	−0.36	0.18
pH	−0.02	0.17	−0.24
P	−0.12	0.07	0.20
K	0.34	−0.18	0.01
Ca	0.37	0.12	0.04
Mg	0.34	0.12	0.16
Mn	0.42	−0.13	−0.01
Zn	0.22	0.12	0.36
Cu	0.16	−0.15	0.17
A-horizon thickness	0.68	−0.51	−0.01
Solum thickness	0.19	−0.10	0.17
Elevation	0.25	−0.46	−0.37
Slope position	0.01	0.14	0.05
Aspect	0.47	−0.53	0.20
Gradient	0.10	−0.05	0.36
Landform Index	0.20	0.17	0.50
Terrain shape index	−0.04	−0.01	0.21

Table 2
Correlations (r) between axes of species and environmental variables from the canonical correspondence analysis (CCA) of data from Wine Spring Creek study area

Variable	Axis 1	Axis 2	Axis 3
Humic matter	0.23	0.28	−0.15
Bulk density	0.09	−0.01	−0.08
Cation exchange capacity	−0.12	0.45	0.02
Base saturation	0.79	−0.04	0.12
Acidity content	−0.37	0.37	−0.04
pH	0.19	−0.13	−0.24
P-index	−0.26	−0.07	0.16
K-index	0.28	0.18	0.04
Ca	0.59	0.08	0.23
Mg	0.60	0.08	0.27
Mn	0.38	0.25	−0.03
Zn	0.33	−0.01	0.54
Cu	0.08	0.06	0.13
A-horizon thickness	0.28	0.67	−0.25
Solum thickness	0.17	0.22	0.08
Rock-type	0.18	−0.16	0.36
Elevation	−0.28	0.33	−0.53
Slope position	0.30	−0.17	−0.02
Aspect	−0.01	0.61	0.06
Gradient	−0.11	0.22	0.23
Landform Index	−0.39	0.08	0.55
Terrain shape index	−0.04	0.04	0.27

In the CCA ordination displaying species occurring on >25% of the total plots (Fig. 3), some of Whittaker's (Whittaker, 1956, p. 45) xerophytic species (*Quercus coccinia, Epigea repens, Q. velutina*) are located at the lower left and mesophytic species (*Acer saccharum, Betula allegheniensis, Fagus grandifolia*) at the upper right. The inset in Fig. 3 displays plotting points of all species and vectors of environmental variables. The point identified by the arrow consists of 21 species that occurred only once on samples in the study area and all on the same plot. An ordination of sample sites (not shown) in relation to axes 1 and 2 placed the subject plot at about the same position. As indicated by the direction and length of arrows labeled with environmental variables (Ter Braak, 1988), A-horizon thickness is strongly associated with species ordination. Axis 1 is closely ($p<0.01$) correlated with concentrations of many soil cations, particularly Ca and Mg, and axis 2 is strongly correlated ($p<0.01$) with A-horizon thickness and aspect (Table 2). Axis 3 (not shown in Fig. 3) is associated with elevation. The proportions of variance in species location accounted for by the three primary axes were 94%, 83%, and 83%, respectively. The eigenvalues of the first four axes were 0.325 for axis 1, 0.284 for axis 2, 0.155 for axis 3, and 0.104 for axis 4. In both ordinations, no distinctive clustering of species occurred that would allow objective grouping by environmental preference without benefit of multivariate analysis.

3.2. Classification

The redundant cluster analyses using binary transformed data[1] indicated that the 79 sample plots could be combined into five groups of similar vegetative composition (Fig. 4). Classification of 59 plots (77%) agreed between the two cluster methods and formed the core plots. Since vegetative composition of the other 20 plots was assumed to be nondistinctive, these

[1] In an unplanned comparison of TWINSPAN classification using untransformed data and informal assessment of results, five primary clusters were also formed and membership of 52 (66%) of the plots agreed with that of core clusters formed with the binary transformed data.

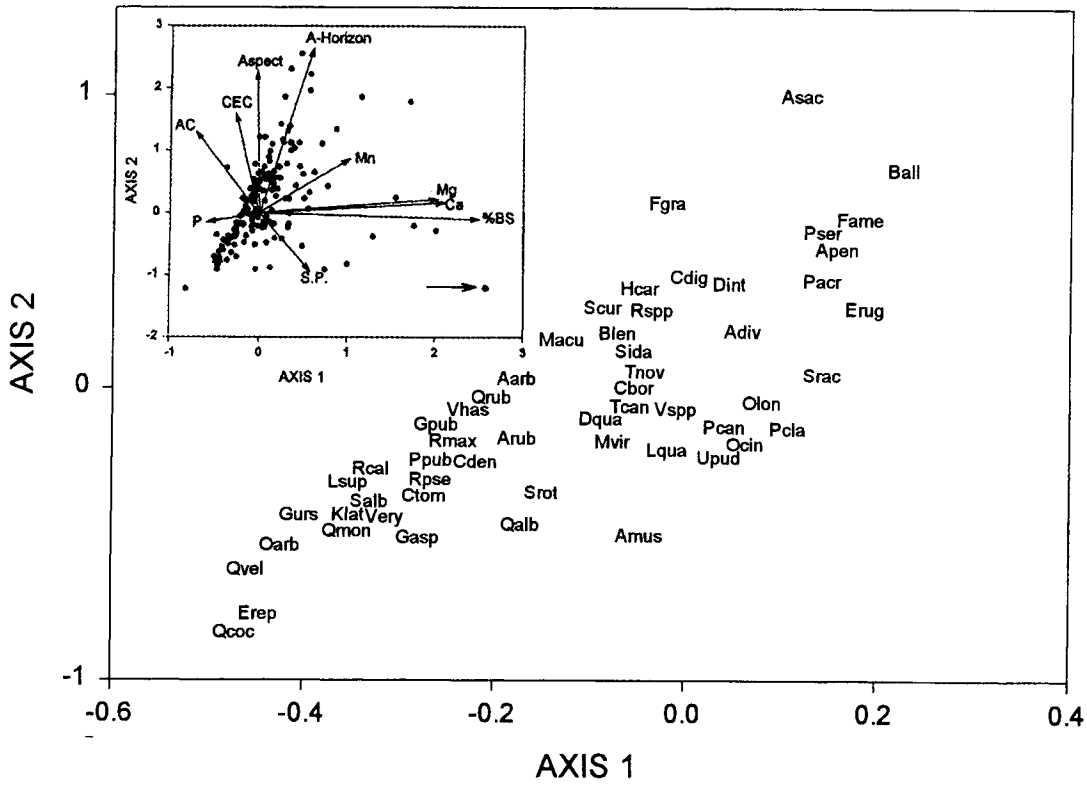

Fig. 3. CCA ordination of relatively abundant species occurring on >25% of sample plots in the Wine Spring Creek study area. Species codes are the same as used in Fig. 2. Plotting location of some species codes (Cden, Fame, Gpub, Lsup, Macu, Pcan, Rcal, Rpse, Sida, Tnov, Tcan, Very, Vhas, Vspp) was adjusted slightly to avoid overprinting. Inset is ordination of all 185 species in relation to axes one and two with selected vectors of environmental variables represented by arrows. The plotting point identified by the arrow is explained in the text.

plots were not placed in a common group. Instead, the plots were assigned to one of the five existing core groups using discriminant models based on the 22 measured environmental variables from the 59 core plots. The discriminant analysis also indicated a high probability that 15 of the original vegetation-classified plots were misclassified when based on soil and topographic variables, but their group assignment was not changed. The proportion of correctly classified plots (i.e. those in core groups and those that remained in the same cluster based on discriminant analysis) was about the same for CLUSTER (82%) and TWINSPAN (80%).

Twenty of the 185 species were significantly ($p<0.01$) associated with the five groups (Table 3). Listed in descending order of discriminating significance, average squared cumulative canonical correlation among species ranged from 0.14 for bloodroot (*Sanguinaria canadensis*) alone to 0.80 for all highly significant species including rhododendron. Cumulative canonical correlation approached 0.99 when 46 species of lesser significance ($p<0.05$) were included. Relative contribution to discriminating probability of each species among groups ranged from very high (coded as ++) when present, high (+), having little discriminating effect whether present or absent (0), to high (−) and very high (−−) when absent. For example, presence of wood-nettle (*Laportea canadense*) strongly increases the probability that a plot is a member of group 4, its presence or absence has little effect for membership in group 1, and its absence increases the probability that the plot is not a member of group 5. Although a large number of species were inventoried, the presence or absence of relatively few are adequate for discrimination among classification groups based only on vegetation. For example, correct

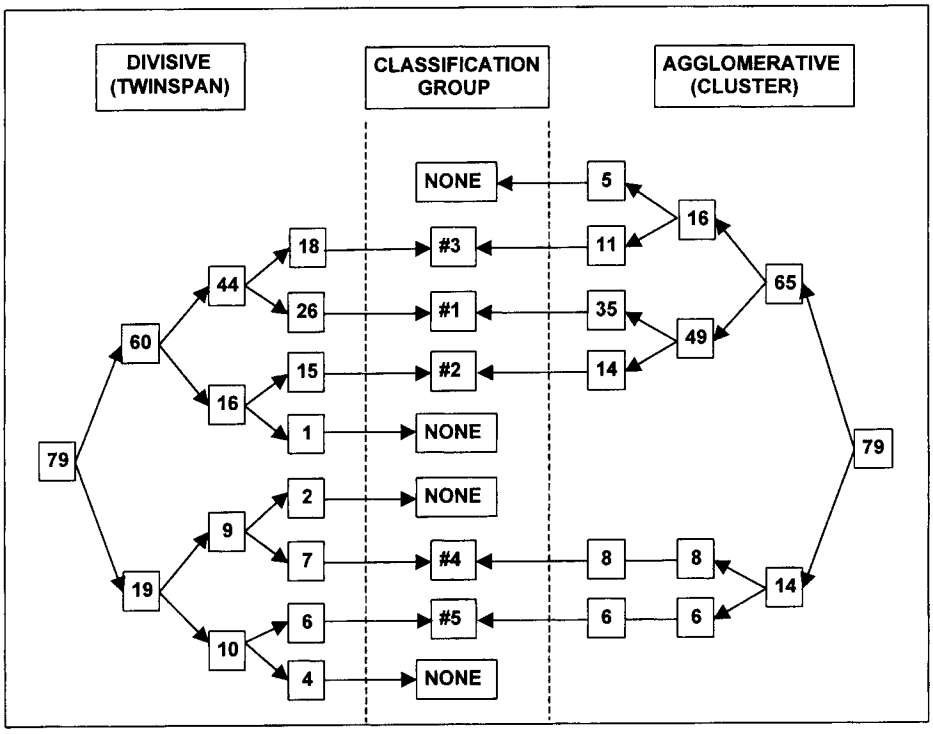

Fig. 4. Dendrograms of major divisions and similar classification groups formed by two methods of cluster analyses on 79 sample plots in the Wine Spring Creek study area.

membership of 75% of the 79 sample plots among the five classification groups is attained using discriminant functions based on inventory of only the first five species listed in Table 3; the level of success will likely be lower if the same functions are applied to an independent validation dataset or in the field. Average values of environmental variables were determined for each of the five groups (Table 4).

3.3. Ecosystem unit descriptions

The five groups of plots are considered ecosystem units as defined by Barnes et al. (1982) and may be characterized by combining their mean (±SD) environmental features with predominant species and percent constancy (proportion of sample plots within a group in which a species occurred):

1. Plots sampled in this ecosystem unit occurred at low to high elevations (950–1600 m), at mid-slope positions, and on all aspects. Soils were characterized by average base saturation (14±5.8%) and intermediate A-horizon thickness (20±10 cm). Herbaceous species with highest constancy were blue-bead lily (*Clintonia borealis*) (38%), downy rattlesnake orchid (*Goodyera pubescens*) (41%), Curtis' goldenrod (*Solidago curtsii*) (34%), and heart-leaved aster (*Aster divaricatus*) (34%). Two ferns – fancy fern (*Dryopteris intermedia*) (55%) and New York fern (*Thelypteris noveboracensis*) (55%) – were common. Rhododendron (93%), mountain laurel (76%), and buffalo nut (*Pyrularia pubera*) (66%) were shrubs with highest constancy. Red maple (96%), northern red oak (90%), and chestnut oak (83%) were common trees. Pitch pine was the most restricted tree species, occurring in only two plots in this unit. This ecosystem unit occurred on 37% (29) of the sampled plots.
2. Plots in this unit were found at moderate (1200 m) to high elevations (1609 m), at mid slope positions, and on all aspects. Soils have average base satura-

Table 3
Significant discriminating species among five classification units (codes explained in text), growth form (G), cumulative canonical correlation squared (Cc^2), *F*-statistic (F), constancy (C%), and cumulative proportion correctly classified (PC%) of 79 plots in the Wine Spring Creek study area

Species	G[a]	1	2	3	4	5	Cc^2	F[b]	C%	PC%
Sanguinaria canadensis	H	+	+	+	0	++	0.14	23.0	5	4
Quercus montana	T	0	−	0	−	0	0.26	19.2	61	38
Vaccinium pallidum	S	−−	−	+	−−	+	0.36	14.3	11	59
Laportea canadense	H	0	+	−	++	−−	0.44	12.6	8	67
Osmorhiza longistylis	H	−	+	0	+	+	0.52	9.4	34	75
Oxydendrum arboreum	T	+	+	+	+	−	0.55	6.8	44	77
Arisaema triphyllum	H	0	0	+	+	++	0.58	5.6	24	78
Cimicifuga americana	H	+	+	+	−	++	0.60	5.8	5	80
Oxalis montana	H	0	+	+	++	−	0.64	8.6	11	82
Lycopodium lucidulum	C	−	+	+	−	−	0.66	4.3	10	84
Tilia heterophylla	T	0	+	+	++	++	0.68	4.2	14	86
Uvularia pudica	H	−−	−−	−	−−	+	0.69	4.0	37	89
Solidago spp.	H	+	++	+	+	−	0.71	3.9	33	91
Melampyrum lineare	H	−−	0	++	+	++	0.73	3.6	23	91
Aster spp.	H	+	+	++	+	++	0.75	6.0	16	94
Dryopteris intermedia	F	+	+	0	0	+	0.76	3.7	66	95
Galium latifolium	H	−	0	+	−	++	0.77	3.2	6	96
Luzula multiflora	H	−	−	+	−	−−	0.78	2.9	6	97
Stellaria corei	H	+	++	++	−	++	0.79	4.1	9	97
Rhododendron maximum	S	++	+	+	+	+	0.80	3.6	77	97

[a]C=clubmoss, F=fern, H=herbaceous, S=shrub, T=tree.
[b]Probability of >F=<0.01 for species listed.

Table 4
Mean (±SD) values of environmental variables by classification group of 79 sample plots in Wine Spring Creek study area

Variable	1 (29)[a]	2 (18)	3 (17)	4 (11)	5 (4)
Humic matter	1.8 (1.1)	2.3 (1.2)	1.2 (0.4)	3.0 (1.5)	2.2 (0.5
Bulk density	0.7 (0.1)	0.7 (0.1)	0.7 (0.1)	0.7 (0.1)	0.7 (0.1)
CEC	6.5 (1.2)	6.8 (1.0)	5.6 (0.6)	8.9 (2.0)	5.8 (1.5)
Base saturation	14.0 (5.8)	10.9 (2.0)	14.7 (3.9)	18.0 (7)	35.5 (18.7)
Acidity content	5.6 (1.1)	6.1 (0.9)	4.7 (0.5)	7.2 (1.6)	3.8 (1.5)
pH	4.5 (0.2)	4.6 (0.1)	4.6 (0.2)	4.2 (0.3)	5.0 (0.2)
P	5.2 (5.8)	2.2 (1.7)	4.5 (3.8)	6.3 (6.4)	4.2 (2.4)
K	39.4 (10.3)	38.7 (10.4)	34.9 (6.1)	46.7 (14.6)	50.8 (5.0)
Ca	7.4 (4.3)	5.2 (1.3)	8.5 (4.0)	11.4 (5.7)	23.6 (15.5)
Mg	3.6 (1.2)	2.8 (0.4)	3.2 (0.6)	3.9 (1.2)	7.2 (2.8)
Mn	151.1 (128)	158.0 (92)	151.6 (99)	247.2 (159)	395.5 (147)
Zn	59.8 (23.5)	43.1 (11.6)	42.6 (10.4)	69.8 (46.8)	54.0 (28.8)
Cu	38.4 (15.5)	34.2 (19.4)	35.3 (18.3)	45.1 (33.0)	38.0 (15.0)
A-thickness	19.9 (10.4)	27.1 (7.2)	14.6 (8.0)	32.2 (4.5)	31.2 (6.2)
Solum thickness	107.1 (20)	113.1 (13)	111.4 (16)	119.9 (12)	126.2 (18)
Elevation	1243.5 (161)	1423.7 (101)	1209.9 (98)	1346.8 (152)	1131.5 (149)
Slope position	46.5 (22.6)	34.2 (21.7)	48.7 (28.3)	41.7 (24.3)	61.0 (23.0)
Aspect	0.88 (0.66)	1.20 (0.58)	0.52 (0.58)	1.62 (0.55)	0.88 (0.98)
Gradient	30.9 (16.9)	20.9 (9.8)	30.5 (13.3)	33.3 (8.7)	40.5 (11)
Landform index	0.27 (0.14)	0.18 (0.09)	0.26 (0.11)	0.31 (0.16)	0.38 (0.08)
Terrain shape	−0.07 (0.09)	−0.10 (0.03)	−0.09 (0.06)	−0.05 (0.09)	−0.12 (0.03)

[a]Number of sample plots in each classification group.

tion (11±2%) and moderately thick A-horizon (27±7 cm). Three herbs are common in this unit: heart-leaved aster, Indian cucumber root (*Medeola virginiana*), and anise root (*Osmorhiza longistylis*), all with 78% constancy. An unidentified sedge (*Carex spp*) attained the highest constancy (78%) for a sedge in the unit. Fancy fern occurred in every sample (100%) and New York fern also had very high (94%) constancy. Rhododendron had the highest constancy (78%) of the shrubs. Trees with 100% constancy included red maple, downy serviceberry (*Amelanchier arborea*), and northern red oak, followed by American chestnut (94%). This ecosystem unit made up 23% (18 plots) of the field samples and was similar in vegetation and site characteristics to the areas at high elevation that DeLapp (1978) found dominated by northern red oak vegetative communities.

3. Sites associated with this ecosystem unit occurred at low to moderate elevations (1100 to 1400 m), at mid-slope positions, and on all aspects. Soils are relatively thin (14±8 cm) and are characterized by average base saturation (14.7±3.9%). Three herbs – Indian cucumber root (94%), galax (*Galax aphylla*) (82%), and an unidentified violet (*Viola spp*) (82%) – and New York fern (88%) were common. Greenbrier (*Smilax rotundifolia*) (88%), followed by mountain laurel (82%) and rhododendron (82%) were common shrubs. Trees with high constancy included red maple (100%), northern red oak (94%), and white oak (*Q. alba*) (88%). This unit occurred on 22% (17) of the sample sites.
4. This unit is present at moderate to high elevations (1000–1500 m), on mid-to-upper slopes, and on northerly aspects. Base saturation averages 8.9±7.0% and the A-horizon is thicker than average (32±4.5 cm). Herbs with the highest constancy included mountain foamflower (*Tiarella cordifolia*) (54%), wood-nettle (54%), and white wood sorrel (*Oxalis montana*) (54%). Fancy fern (91%) was the fern with highest constancy and a species of blackberry (*Rubus spp*) (54%) was the most common species in the shrub layer. Trees with highest constancy were yellow birch (*Betula allegheniensis*) (91%) and striped maple (*Acer pensylvanicum*) (82%). Eleven plots (14%) were present in this ecosystem unit.
5. This ecosystem unit occurred at low-to-moderate elevations (950–1200 m), at lower slope positions, and on all aspects. Soils are characterized by higher than average base saturation (35.5±18.7%) and A-horizon thickness (31.2±6.2 cm). Five herbs occurred with 100% constancy in this unit: jack in the pulpit (*Arisaema triphyllum*), Indian cucumber root, common Solomon's seal (*Polygonatum biflorum*), false spikenard (*Smilacina racemosa*), and perfoliate bellwort (*Uvularia sessilifolia*). Deertongue grass (*Panicum clandestrinum*) was present with high constancy (100%) and constancy of three ferns was 100%: fancy fern, Christmas fern (*Polystichum acrostichiodes*), and New York fern. Buffalo nut and common greengrier were the most prevalent shrubs, both with 75% constancy. Trees occurring with 100% constancy included red maple, yellow birch, white ash (*Fraxinus americana*), and Canada hemlock. This unit was represented by 5% (4) of the sample sites.

Soil variables were the most significant environmental discriminators and included A-horizon thickness, Mg, and pH, followed by geologic rock-type (Table 5); elevation was the most important topographic variable.

3.4. Subdivision of ecosystem units

An unplanned subdivision of ecosystem unit 2, represented by 18 plots, was attempted for several purposes: (1) to determine if relatively homogeneous primary units could be partitioned into smaller subunits of greater species and environmental uniformity; (2) to test redundant cluster analysis methods; and (3) to compare with findings presented by DeLapp (1978). TWINSPAN and CLUSTER identified two groups consisting of four and 12 core plots each; two non-core plots were omitted from further evaluation. Vegetative and environmental characteristics of the two subdivided ecosystem units, both dominated by northern red oak overstory, follow:

2A Four north-facing plots that generally lack a shrub understory, but have a herbaceous layer of white snakeroot (*Eupatorium rugosum*). DeLapp (1978) described this vegetative community as the mixed herb phase of northern red oak stands and inventoried

Table 5
Significant soil and topographic variables associated with five ecosystem units in the Wine Spring Creek study area

Variable	*F*-Statistic	Prob > F
A-horizon thickness	20.03	0.0001
Mg	14.19	0.0001
pH	14.78	0.0001
Rock-type	4.07	0.0050
Mn	3.49	0.0117
Elevation	3.92	0.0063
Cation exchange capacity	3.16	0.0206
Zn	2.35	0.0626
Ca	2.30	0.0674
Base saturation	1.91	0.1192
Azimuth	1.85	0.1284
Humic matter	1.79	0.1432
P	1.37	0.2549
Gradient	1.04	0.3944
Solum thickness	1.10	0.3620
Bulk density	1.07	0.3781
Landform index	0.52	0.7242
Terrain shape index	0.64	0.6355
Acidity factors	0.46	0.7631
K	0.84	0.5044
Slope position	0.78	0.5446
Cu	0.07	0.9918

several plots of similar species composition in the vicinity of Wine Spring Bald.

2B twelve southeasterly-facing plots with a shrub understory of rhododendron, mountain laurel, and flame azalea present in these plots and lacking in the 2A plots, are a group of herbaceous species including blue-bead lily, Indian cucumber-root, anise-root, and cinnamon fern (*Osmunda cinnamomea*). These plots correspond to the *Kalmia latifolia* and *Rhododendron maximum* phases of the high elevation northern red oak community described by DeLapp (1978).

DeLapp (1978) reported seven characteristic understory vegetation-types occurring beneath northern red oak stands and suggested that each is "responding to subtly different environmental conditions." However, environmental data were not presented to support his observations. Ecological significance of these subunits cannot be inferred due to small number of plots in the study. However, the main difference in these two sets of plots appears to be aspect and concentration of Cu, which was greater (52 ± 33 meq./100 cm^3) in 2A than in 2B (29 ± 11 meq./100 cm^3).

4. Discussion

Study results produced a logical classification of major ecosystem units in the Wine Spring Creek project area and suggest that vegetation provides a suitable means for identifying ecosystem units. No single species was diagnostic for any classification unit, however, field inventory of less than 20 species (Table 3) allows satisfactory identification of ecosystem units. As with vegetation, no particular environmental variable is associated with any ecosystem unit (Table 4). The broad range of values of most soil and topographic variables within a classification unit suggests that different magnitudes of variables may combine to form similar environmental conditions suitable for one or more species. A key based on presence of significant species and characteristics of significant soil variables, for example A-horizon thickness (Table 5), will be helpful for consistent field identification of ecosystem units.

Many widely distributed species, including red maple, northern red oak, and rhododendron were located near the center of both ordinations, suggesting their wide distribution in the study area resulted from lack of a clear preference for specific environmental conditions. Both DCA and CCA ordinations indicated that the distribution of species is mainly associated with two variables: thickness of the A-horizon and soil cation levels. In a study area conducted about 60 km southeast of Wine Springs Creek, Mowbray and Oosting (1968) reported that distribution of arborescent vegetation was strongly associated with moisture availability, which itself was highly correlated with soil texture, thickness of the solum, and somewhat with A horizon thickness. Although total solum thickness was not always determined in our study, especially where it was >122 cm, it was significantly correlated (r=0.42, p<0.0001) with A horizon thickness, as Mowbray and Oosting (1968) also reported. Results of other classification studies conducted in this region also suggested that moisture regimes within elevation zones are primarily responsible for the distribution of species (Gattis, 1992; Moffat, 1993; Patterson, 1994).

Concentration of soil cations is considered an indication of site fertility status (Mowbray and Oosting, 1968). The strong association of fertility with distribution of species in the Wine Spring Creek study area

primarily results from the influence of the single sample plot identified in Fig. 3.[2] Although this plot met all selection criteria when vegetation and site data were collected, subsequent field examination indicated that it had probably been cultivated prior to Forest Service acquisition (Ayres and Ashe, 1905). Twenty-one species[3] inventoried in the study area occurred only on this plot, but their affinity with soils of high fertility status, or disturbance regime, is unknown. Quantities of Ca and Mg on this plot were almost twice the amounts measured on any other plot. High levels of Ca and Mg in the A-horizon of this plot may be attributed in part to leaf fall from species of the dominant arborescent vegetation (>75% of basal area consisted of yellow-poplar, hickory (*Carya spp*), and black cherry (*Prunus serotina*)) that have above-average foliar concentrations of these elements (Cotrufo, 1977). In support of this hypothesis, Kalisz (1986) reported that high soil Ca content of abandoned Appalachian old fields was primarily due to accumulation resulting from yellow-poplar leaf fall.

Distribution of ecosystem units in the Wine Spring Creek study area logically parallels the relationship of species and was associated mainly with soil variables and to a lesser extent with aspect and elevation. Except for fertility as expressed directly by soil cation concentrations, this study did not relate other environmental variables, such as site moisture and temperature regimes to factors directly affecting physiological processes of vegetation. However, results of another study in this region indicate that soil moisture regime and fertility are associated with A-horizon thickness, and that temperature regime and soil moisture are correlated with aspect through solar radiation received (Mowbray and Oosting, 1968).

Geologic formation exerted little apparent influence on overall vegetation distribution; however, it was a significant discriminating variable for ecosystem unit. One explanation of this relationship is that rock-type is associated with elevation in the study area, and thus, discriminates between ecosystem units at predominately low elevation units (3 and 5) from those units generally occurring at high elevation (2 and 4). However, Graves and Monk (1985) reported that herbaceous and shrub cover and species were significantly different over schist and marble at the same elevation in northeastern Georgia.

Our results differed significantly from an earlier study of vegetation–site relationships in the Wine Spring basin. The earlier study indicated that topographic factors are important discriminating variables, especially elevation and landform (McNab and Browning, 1993). Gattis (1992) and Moffat (1993) also reported that topographic variables were generally more important than soil properties for discriminating classification units. However, we found that while soil and topographic variables were individually correlated with ordination axes, soil properties discriminated among ecosystem units better than topographic variables. One explanation is that topography accounts for edaphic characteristics in the absence of soils, but when both types of variables are present, soils assume major importance.

Fewer classification units were identified in the Wine Spring study area than in other nearby mountainous regions, although additional minor units might be represented by one or more non-core groups (Fig. 4). From 6 to 10 classification units were reported by Gattis (1992), Patterson (1994), Moffat (1993), and Elliott et al., 1997 (unpublished report). Explanations include: (1) sensitivity of classification based on binary transformation is lacking; (2) the stratified-random sampling design did not include an occurring ecosystem unit; or (3) simply that no other units are present in the Wine Spring Creek study area. However, a classification unit dominated by white oak (*Q. alba*), identified in our previous classification (McNab and Browning, 1993) and reported by others (Whittaker, 1956; Gattis, 1992; Patterson, 1994) was not classified in our study, even though we sampled two plots with high proportions (>50%

[2]In an unplanned CCA analysis, deletion of the subject plot from the dataset resulted in: (1) much diminished importance of all variables associated with soil fertility and their disassociation with axis 1, (2) increased importance of A horizon thickness and aspect, and their association with axis 1, and (3) increased importance of elevation and landform index (equal to that of the A-horizon), and their association with axis 2.

[3]*Andropogon scoparius, Antennaria plantaginifolia, Aster prenanthoides, Carex pennsylvanica, Cypripedium acaule, C. pubescens, Desmodium nudiflorum, Euonymus americanus, Fragaria virginiana, Galium pilosum, Lindera benzoin, Liparis lilifolia, Melanthium hybridum, Oxalis grandis, Parthenocissus quinquefolia, Platanaceae clavellata, Polygonum convolvulus, Prunella vulgaris, Rhus toxicodendron, Thalictrum thalictroides, Tradescantia ohiensis.*

basal area) of this species. Closer examination of data from these two plots, which were classified in different ecosystem units, indicated that the plots were compositionally and environmentally more similar to other ecosystem units than to one another. Simply possessing an abundance of one arborescent species did not cause these plots to be classified as a unique ecosystem unit.

We demonstrated, as DeLapp (1978) reported, that ecosystem units occurring at high elevation and dominated by northern red oaks can be subdivided into smaller units of homogeneous understory composition. However, we did not encounter the following five understory species reported on sample plots he installed 20 years earlier within our study area on Wayah and Wine Spring Balds: *Viburnum cassinoides*, *Salix humilis*, *Rhododendron viscosum*, *R. arborescens*, and *Lyonia ligustrina*. This observation suggests that strict adherence to a statistically sound, objective sampling strategy may produce an incomplete inventory of species and perhaps influence classification results. Or, perhaps species with certain disturbance-related regeneration requirements can disappear from permanent plots during successive 20-year inventory intervals (Elliott et al., 1997, unpublished report).

The distribution and abundance of several tree and shrub species in the study area may be partly attributed to the occurrence of or lack of two types of disturbance: loss of American chestnut as a canopy species and fire. Woods and Shanks (1959) found tree species benefiting most from American chestnut death were chestnut oak, northern red oak, and red maple; benefiting shrubs include mountain laurel and rhododendron (Monk et al., 1985). Fire occurrence in the watershed has been infrequent since European settlement (Ayres and Ashe, 1905) compared to probable prehistoric occurrence (Van Lear and Waldrop, 1989). Lack of fire partially accounts for the low frequency of occurrence of pitch pine (Barden and Woods, 1976; Elliott et al., 1997, unpublished report).

Our efforts to reduce subjectivity in classification of ecosystem units in the study area have been a qualified, although untested, success. Using binary data transformation, redundant clustering analyses, and discriminant functions we developed a conservative, logical classification of primary ecosystem units. Testing of other data transformations, such as importance values, and other classification methods will be done in subsequent studies using the Wine Spring Creek dataset to evaluate and extend results reported here. Summarization of species cover–abundance data will be necessary for subsequent detailed descriptions of vegetation associated with the ecosystem units and likely response to disturbance resulting from resource management activities.

5. Implications for management

Classification units are not necessarily management units because response to disturbance, productivity, and other considerations have not been established. Further evaluation will determine if ecosystem units identified can be grouped for resource management into site units. Site units are mappable areas that have "(1) similar silvicultural potential (such as choice of species, cultural treatments); (2) similar risks of damage from insects, diseases, or windthrow; and (3) similar growth and yield of forest trees" (Barnes et al., 1982). For example, average site indexes of upland oaks (Olson, 1959) in the ecosystem units described are 18.8 m for unit 1, 19.9 m for unit 2, 18.4 m for unit 3, 12.4 m for unit 4, and 20.4 m for unit 5. These indexes suggest differences in potential productivity of timber resources.

Ecological relationships derived in this study may be used for other forest management related purposes, such as regeneration of desirable tree species. For example, occurrence of mountain laurel, an evergreen shrub that may hinder tree regeneration (Monk et al., 1985), was significantly correlated with A-horizon thickness (0.56, $p<0.0001$) and aspect (0.38, $p<0.0005$), and several other variables. A logistic regression model was developed to estimate probability of occurrence of mountain laurel in the study area as a function A-horizon thickness and transformed aspect (Fig. 5). The model indicates that probability of occurrence of this species decreases with increasing A-horizon thickness and changes little in relation to aspect. Cover and abundance data for this species would also be desirable for regeneration prescriptions.

With additional study, some ecosystem units may be subdivided into smaller, more uniform subunits (such as demonstrated for unit 2) for assessment of management requirements, such as maintenance of biological diversity. In 11 replications of an classification unit identified in a preliminary study (McNab and

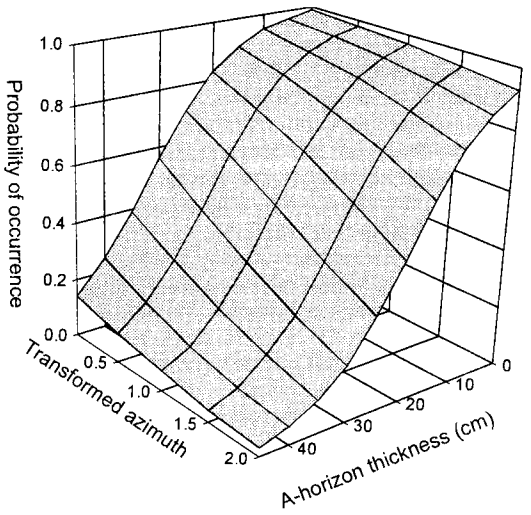

Fig. 5. Probability of occurrence of mountain laurel (*Kalmia latifolia*) as a function of transformed aspect (0.0= southwest, 2.0= northeast) and A-horizon thickness in the Wine Spring Creek study area.

Browning, 1993), Elliott and Hewitt (1997) found that species diversity can differ considerably. As Boyce and McNab (1994) suggest, knowledge gained in similar studies will be most useful when linked with models of vegetative response to disturbance (Loftis, 1990; Clinton et al., 1994) and other faunal ecosystem components. The combined information can then be applied to planning and on-the-ground resource management projects to predict the interrelated effects of purposeful manipulation of vegetation in specific site units.

Acknowledgements

We thank Michael L. Wilkins, district ranger of the Wayah Ranger District, Nantahala National Forest, for logistical support of this project. The idea and potential benefits of using presence–absence data transformation originated through discussions with David L. Loftis. Katherine J. Elliott and H. Michael Rauscher critically reviewed an early draft of our paper.

References

Ayres, H.B., Ashe, W.W., 1905. The southern Appalachian forests. Professional Paper 37. Series H, Forestry, 12, Department of Interior, U.S. Geological Survey, Washington, DC, 291 pp.

Baker, T.T., VanLear, D.H. [Undated]. Rhododendron thickets: Characteristics and effects on species richness and succession in a southern Appalachian riparian forest. Unpublished report, Department of Forest Resources, Clemson University, Clemson, SC, 23 pp.

Barden, L.S., Woods, F.W., 1976. Effects of fire on pine and pine-hardwood forests in the southern Appalachians. Forest Science 22, 399–403.

Barnes, B.V., Pregitzer, K.S., Spies, T.A., Spooner, V.H., 1982. Ecological forest site classification. Journal of Forestry 80, 493–498.

Beers, T.W., Dress, P.E., Wensel, L.C., 1966. Aspect transformation in site productivity research. Journal of Forestry 64, 691–692.

Boyce, S.G., McNab, W.H., 1994. Management of forested landscapes. Journal of Forestry 92, 27–32.

Clinton, B.D., Boring, L.R., Swank, W.T., 1994. Regeneration patterns in canopy gaps of mixed-oak forests of the southern Appalachians: influences of topographic position and evergreen understory. American Midland Naturalist 132, 308–319.

Cotrufo, C., 1977. Nutrient content in litter fall of an Appalachian hardwood stand. The Journal of the Elisha Mitchell Scientific Society 93(1), 27–33.

DeLapp, J.A., 1978. Gradient analysis and classification of the high elevation red oak community of the southern Appalachians. M.Sc. Thesis, North Carolina State University Raleigh, NC, 292 pp.

Elliott, K.J., Hewitt, D., 1997. Forest species diversity in upper elevation hardwood forests in the southern Appalachian Mountains. Castanea 62, 32–42.

Elliott, K.J., Swank, W.T., Vose, J.M., Bolstad, P.V., 1997. Vegetation–site relationships for a 20-year interval in the Coweeta Basin, western North Carolina, USA. Unpublished report on file, USDA Forest Service, Coweeta Hydrologic Laboratory, Otto, NC, 28 pp.

Frenkel, R.E., Harrison, C.M., 1974. An assessment of the usefulness of phytosociological and numerical classificatory methods for the community biogeographer. Journal of Biogeography 1, 27–56.

Gattis, J.T., 1992. Landscape ecosystem classification on the Highlands Ranger District, Nantahala National Forest in North Carolina, M.Sc. Thesis, Clemson University, Clemson, SC, 55 p.

Gauch Jr., H.G., Whittaker, R.H., 1981. Hierarchical classification of community data. Journal of Ecology 69, 537–557.

Golden, M.S., 1981. An integrated multivariate analysis of forest communities of the central Great Smoky Mountains. American Midland Naturalist 106, 37–53.

Graves, J.H., Monk, C.D., 1985. A comparison of soils and vegetation over marble and schist along tributaries to Panther Creek Stephens County, Georgia. Castanea 50, 146–163.

Hedman, C.W., 1993. Quantification and characterization of in-stream large woody debris in Wine Spring Creek watershed. Unpublished report on file. USDA Forest Service, Blacksburg, VA, 17 pp.

Hedman, C.W., VanLear, D.H., 1995. Vegetative structure and composition of southern Appalachian riparian forests. Bulletin of the Torrey Botanical Club 122(2), 134–144.

Hill, M.O., 1973. Reciprocal averaging: an eigenvector method of ordination. Journal of Ecology 61(1), 237–249.

Hill, M.O., 1979. TWINSPAN – A FORTRAN program for arranging multivariate data in an ordered two-way table by classification of the individuals and attributes. Cornell University, Ithaca, NY, 60 pp.

Jongman, R.H.G., terBraak, C.J.F., vanTongeren, O.F.R. (Eds.), 1987. Data Analysis in Community and Landscape Ecology. Pudoc Wageningen, The Netherlands, 299 pp.

Kalisz, P.J., 1986. Soil properties of steep Appalachian old fields. Ecology 67(4), 1011–1023.

Kent, M., Coker, P., 1995. Vegetation Description and Analysis – A Practical Approach. Wiley, New York, 363 pp.

Kimmins, J.P., 1991. The future of the forested landscapes of Canada. The Forestry Chronicle 67, 14–18.

Loftis, D.L., 1990. A shelterwood method for regenerating red oak in the southern Appalachians. Forest Science 36(4), 917–929.

McNab, W.H., Browning, S.B., 1993. Preliminary ecological classification of arborescent communities on the Wine Spring Creek watershed, Nantahala National Forest. In: Brissette, J.C. (Ed.), Proceedings of the Seventh Biennial Southern Silvicultural Research Conference. 17–19 November 1992, Mobile, AL, US For. Serv. Gen. Tech. Rep. SO-93. 1992, pp. 213–221.

Moffat, S.O., 1993. Landscape ecosystem classification for the Chattooga Ranger District, Chattahoochee National Forest, Georgia. M.Sc. Thesis. Clemson University, Clemson, SC, 85 pp.

Monk, C.D., McGinty, D.T., Day Jr., F.P., 1985. The ecological importance of *Kalmia latifolia* and *Rhododendron maximum* in the deciduous forest of the southern Appalachians. Bull. Torrey Bot. Club 112, 187–193.

Mowbray, T.B., Oosting, H.J., 1968. Vegetation gradients in relation to environment and phenology in a southern Blue Ridge gorge. Ecological Monographs 38, 309–344.

Olson, Jr., D.J., 1959. Site index curves for upland oak in the Southeast. US For. Serv. Res. Note 125. Southeastern Forest Experiment Station, Asheville, NC, 2 p.

Palmer, M.W., 1993. Putting things in even better order: the advantages of canonical correspondence analysis. Ecology 74(8), 2215–2230.

Patterson, K.D., 1994. Classification of vegetation in Ellicott Rock Wilderness, Southeastern Blue Ridge Escarpment. M.Sc. Thesis. North Carolina State University, Raleigh, NC, 91 pp.

Peet, R.K., Wentworth, T.R., White, P.S. [Undated] A flexible, multipurpose method for measuring vegetation. Unpublished report on file. University of North Carolina, Chapel Hill, NC, 38 pp.

Radford, A.E., Ahles, H.E., Bell, C.R., 1968. Manual of the Vascular Flora of the Carolinas. The University of North Carolina Press, Chapel Hill, NC, 1183 pp.

SAS Institute Inc., 1985. SAS User's Guide: Statistics, Version 5 ed. SAS Institute Inc., Cary, NC, 956 pp.

Sokal, R.R., 1974. Classification: Purposes, principles, progress, prospects. Science 185, 1115–1123.

Strahler, A.H., 1977. Response of woody species to site factors in Maryland, USA: Evaluation of sampling plans and continuous and binary measurement techniques. Vegetatio 35, 1–19.

Swank, W.T., McNulty, S.G., Swift, Jr., L.W., 1994. Opportunities for forest hydrology applications to ecosystem management. In: Ohta, T., Fukushima, Y., Suzuki, M. (Eds.), Proceedings of the International Symposium on Forest Hydrology; 24–28 October 1994, Tokyo, Japan, International Union of Forestry Research Organizations, Organizing committee of the International Symposium on Forest Hydrology, 1994, pp. 19–29.

Swift, L., 1993. Climatology of the Wine Spring basin. Study plan on file, Coweeta Hydrologic Lab, Otto, NC, [Pages unknown].

Tausch, R.J., Charlet, D.A., Weixelman, D.A., Zamudio, D.C., 1995. Patterns of ordination and classification instability resulting from changes in input data order. Journal of Vegetation Science 6, 897–902.

Ter Braak, C.J.F., 1988. CANOCO – a FORTRAN program for canonical community ordination by canonical correspondence analysis (Version 3.0). Tech. Rpt. LWA-88-02. Agricultural Mathematics Group, Wageningen, The Netherlands, 95 pp.

Thomas, D.J., 1996. Soil survey of Macon County, North Carolina. USDA National Resource Conservation Service, 322 pp.

Van Lear, D.H., Waldrop, T.A., 1989. History, uses, and effects of fire in the Appalachians. U.S. For. Serv. Gen. Tech. Rep. SE-54, 20 pp.

Whittaker, R.H., 1956. Vegetation of the Great Smoky Mountains. Ecological Monographs 26, 1–80.

Williams, W.T., Lance, G.N., Webb, L.J., Tracey, J.G., 1973. Studies in the numerical analysis of complex rain-forest communities. Journal of Ecology 61(1), 47–70.

Woods, F.W., Shanks, R.E., 1959. Natural replacement of chestnut by other species. Ecology 40, 349–361.

Yurkovich, S.P., Wilson, T., [Undated] Unpublished report on geology of Wine Spring Creek study area. On file Wayah Ranger District, Franklin, NC, [Pages unknown].

Forest Ecology and Management

Submission of manuscripts.
Manuscripts should be submitted in triplicate. Authors from the Americas, Australia, New Zealand and the Pacific are requested to send their manuscripts to *Forest Ecology and Management*, Dr. Richard F. Fisher, Department of Forest Science, Texas A&M University, College Station, TX77843-2135, USA; all other authors are requested to send their manuscripts to the Editorial Office, *Forest Ecology and Management*, P.O. Box 181, 1000 AD Amsterdam, The Netherlands.

Authors in Japan please note: Upon request, Elsevier Science Japan will provide authors with a list of people who can check and improve the English of their paper (*before submission*). Please contract our Tokyo office: Elsevier Science Japan, 1-9-15 Higashi-Azabu, Minato-ku, Tokyo 106-0044, Japan; tel. (+81)-3-5561-5033; fax (+81)-3-5561-5047.

Electronic manuscripts: Electronic manuscripts have the advantage that there is no need for the rekeying of text, thereby avoiding the possibility of introducing errors and resulting in reliable and fast delivery of proofs.
For the initial submission of manuscripts for consideration, hardcopies are sufficient. For the processing of *accepted papers*, electronic versions are preferred. After *final acceptance*, your disk plus two, final and exactly matching printed versions should be submitted together. Double density (DD) or high density (HD) diskettes (3.5 or 5.25 inch) are acceptable. It is important that the file saved is in the native format of the wordprocessor program used. Label the disk with the name of the computer and wordprocessing package used, your name, and the name of the file on the disk. Further information may be obtained from the Publisher.

Enquiries concerning manuscripts and proofs: questions arising after acceptance of the manuscript, especially those relating to proofs, should be directed to Elsevier Science Ireland Ltd., Bay 15K, Shannon Industrial Estate, Shannon, Co. Clare, Ireland, tel. (+353-61) 471944; fax(+353-61) 472144.

Advertising information: Advertising orders and enquiries can be sent to: **USA, Canada and South America:** Mr Tino de Carlo, The Advertising Department, Elsevier Science Inc., 655 Avenue of the Americas, New York, NY 10010-5107, USA; phone: (+1) (212) 633 3815; fax: (1) (212) 633 3820; e-mail: t.decarlo@elsevier.com **Japan:** The Advertising Department, Elsevier Science K.K., 9–15 Higashi-Azabu 1-chome, Minato-ku, Tokyo 106, Japan; phone: (+81) (3) 5561 5033; fax: (+81) (3) 5561 5047. **Europe and ROW:** Rachel Gresle-Farthing, The Advertising Department, Elsevier Science Ltd., The Boulevard, Langford Lane, Kidlington, Oxford OX5 1GB, UK; phone: (+44) (1865) 843565; fax: (+44) (1865) 843976; e-mail: r.gresle-farthing@elsevier.co.uk

Orders, claims, and product enquiries: please contact the Customer Support Department at the Regional Sales Office nearest you:
New York: Elsevier Science, PO Box 945, New York, NY 10159-0945, USA; Tel.: (+1) (212) 633 3730 [toll free number for North American customers: 1-888-4ES-INFO (437-4636)]; Fax: (+1) (212) 633 3680; E-mail: usinfo-f@elsevier.com
Amsterdam: Elsevier Science, PO Box 211, 1000 AE Amsterdam, The Netherlands; Tel.: (+31) 20 4853757; Fax: (+31) 20 4853432; E-mail: nlinfo-f@elsevier.nl
Tokyo: Elsevier Science, 9-15, Higashi-Azabu 1-chome, Minato-ku, Tokyo 106-0044, Japan; Tel.: (+81) (3) 5561 5033; Fax: (+81) (3) 5561 5047; E-mail: info@elsevier.co.jp
Singapore: Elsevier Science, No. 1 Temasek Avenue, #17-01 Millenia Tower, Singapore 039192; Tel.: (+65) 434 3727; Fax: (+65) 337 2230; E-mail: asiainfo@elsevier.com.sg
Rio de Janeiro: Elsevier Science, Rua Sete de Setembro 111/16 Andar, 20050-002 Centro, Rio de Janeiro – RJ, Brazil; Tel.: (+55) (21) 509 5340; Fax: (+55) (21) 507 1991; E-mail: elsevier@campus.com.br [Note (Latin America): for orders, claims and help desk information, please contact the Regional Sales Office in New York as listed above]

US mailing info: *Forest Ecology and Management* (0378-1121) is published monthly by Elsevier Science B.V. (Molenwerf 1, Postbus 211, 1000 AE Amsterdam). Annual subscription price in the USA is US$ 2307.00 (valid in North, Central and South America), including air speed delivery. Second class postage rate is paid at Jamaica, NY 11431.
USA POSTMASTERS: Send address changes to *Forest Ecology and Management* Publications Expediting, Inc., 200 Meacham Avenue, Elmont, NY 11003.
AIRFREIGHT AND MAILING in the USA by Publications Expediting Inc., 200 Meacham Avenue, Elmont, NY 11003.

***Forest Ecology and Management* has no page charges**

For a full and complete Guide for Authors, please refer to *Forest Ecology and Management*, Vol. 113, No. 1, pp. 105–108. The instructions can also be found on the World Wide Web: access under http://www.elsevier.nl or http://www.elsevier.com

∞ The paper used in this publication meets the requirements of ANSI/NISO Z39.48-1992 (Permanence of Paper).

Printed in The Netherlands

LANDSCAPE AND URBAN PLANNING

An International Journal of Landscape Ecology, Landscape Planning and Landscape design

Editor-in-Chief:
J.E. Rodiek, *College of Architecture, Texas A & M University, College Station, TX 77843-3137, USA*

AIMS AND SCOPE

A journal concerned with conceptual, scientific and design approaches to land use. By emphasizing ecological understanding and a multi-disciplinary approach to analysis and planning and design, it attempts to draw attention to the interrelated nature of problems posed by nature and human use of land. In addition, papers dealing with ecological processes and interactions within urban areas, and between these areas and the surrounding natural systems which support them, will be considered. Papers in which specific problems are examined are welcome. Topics might include but are not limited to landscape ecology, landscape planning and landscape design. Landscape ecology examines how heterogeneous combinations of ecosystems are structured, how they function and how they change. Landscape planning examines the various ways humans structure their land use changes. Landscape design involves the physical strategies and forms by which land use change is actually directed. *Landscape and Urban Planning* is based on the premise that research linked to practice will ultimately improve the human made landscape.

Editorial Advisory Board:

I.D. Bishop, *Parkville, Vic., Australia,*
E.G. Bolen, *Wilmington, NC, USA,*
I.D. Bruns, *Schorndorf, Germany,*
J.B. Byrom, *Edinburgh, UK,*
T.C. Daniel, *Tucson, AZ, USA,*
R.M. DeGraaf, *Amherst, MA, USA,*
J.G. Fabos, *Amherst, MA, USA,*
S. Gonzalez Alonso, *Madrid, Spain,*
M. Hough, *Etobicoke, ON, Canada,*
P. Jacobs, *Montreal, PQ, Canada,*
D.S. Jones, *Melbourne, Vic., Australia,*
H. Lavery, *Milton, Qld., Australia,*
W.M. Marsh, *Flint, MI, USA,*
D.L. Mitchell, *Dallas, TX, USA,*
D.G. Morrison, *Athens, GA, USA,*
J.I. Nassauer, *St. Paul, MN, USA,*
M. Nelischer, *Guelph, ON, Canada,*
D.D. Paterson, *Vancouver, BC, Canada,*
A. Ramos, *Madrid, Spain,*
P. Shepard, *Claremont, CA, USA,*
O.R. Skage, *Alnarp, Sweden,*
R.C. Smardon, *Syracuse, NY, USA,*
G. Sorte, *Alnarp, Sweden,*
F. Stearns, *Rhinelander, WI, USA,*
R.C. Szaro, *Washington, DC, USA,*
J.W. Thomas, *La Grande, OR, USA,*
P.J. Trowbridge, *Ithaca, NY, USA,*
T.H.D. Turner, *London, UK,*
M.J. Vroom, *Wageningen, The Netherlands,*
W.V. Wendler, *College Station, TX, USA,*
B.-E. Yang, *Seoul, Korea,*
E.H. Zube, *Tucson, AZ, USA*

ABSTRACTED/INDEXED IN

Applied Ecology Abstracts, Biological Abstracts, Current Contents B & S, Environmental Periodicals Bibliography, Geobase, Geographical Abstracts, LandSearch.

1994 SUBSCRIPTION DATA

Volumes 28-30 (in 9 issues)
Subscription price:
Dfl. 1080.00 (US $ 584.00)
incl. Postage
ISSN 0169-2046

Elsevier Science Publishers,
P.O. Box 211, 1000 AE Amsterdam,
The Netherlands
Fax: (020) 5803-203

Customers in the USA and Canada:
Elsevier Science Publishers
P.O. Box 945, Madison Square Station,
New York, NY 10160-0757, USA
Fax: (212) 633-3680

The Dutch Guilder price quoted applies worldwide, except in the Americas (North, Central and South America). The US Dollar price quoted applies in the Americas only. **Non VAT registered customers in the European Community should add the appropriate VAT rate applicable in their country to the price.**

ELSEVIER
SCIENCE PUBLISHERS