WOOD AND FIBER SCIENCE

(ISSN 0735-6161)

Volume 36 • October 2004 • Number 4

JOURNAL OF THE

SOCIETY OF WOOD SCIENCE AND TECHNOLOGY SWST

WOOD AND FIBER SCIENCE

WOOD AND FIBER SCIENCE is published quarterly in January, April, July, and October by the Society of Wood Science and Technology, One Gifford Pinchot Dr., Madison, WI 53726-2398, in cooperation with the Forest Products Society.

There are three classes of membership in the Society: Members—dues $75.00; Retired Members—dues $40.00; Student Members—dues $25.00. Applications for membership and information about the Society may be obtained from the Executive Director, Society of Wood Science and Technology, One Gifford Pinchot Dr., Madison, WI 53726-2398.

Institutions and individuals may subscribe to WOOD AND FIBER SCIENCE at $250.00 per volume (four issues). New subscriptions begin with the first issue of a new volume. Single issues are $28.00 each. Back issues may be purchased for $10.00 each, except for 1994 and later years, which are full price. All subscriptions are to be ordered through the Executive Director. Make checks for subscriptions and membership payable to the Society of Wood Science and Technology.

The Executive Director, at the Business Office shown below, should be notified 30 days in advance of a change in address. Copies undeliverable because of address change will be destroyed. Issues lost in the mail will be replaced free if notice is received within one month of date of issue of the succeeding number.

Printing Office: Allen Press, Inc., P.O. Box 621, Lawrence, KS 66044, USA

Business Office: Society of Wood Science and Technology. One Gifford Pinchot Dr., Madison, WI 53726-2398

Editorial Office: Geza Ifju, Department of Wood Science and Forest Products, Brooks Forest Projects Center, Virginia Tech, Blacksburg, VA 24061-0503.

POSTMASTER: Send address changes to the Society of Wood Science and Technology, One Gifford Pinchot Dr., Madison, WI 53726-2398

Periodicals postage paid at Madison, Wisconsin 53726-2398, USA, and at additional mailing offices.

This issue was mailed October 5, 2004

This paper meets the requirements of ANSI/NISO Z39.48-1992 (Permanence of Paper).

MECHANICAL PROPERTIES OF SMALL-SCALE WOOD LAMINATED COMPOSITE POLES[1]

Cheng Piao
Postdoctoral Research Scientist

Todd F. Shupe†
Associate Professor
School of Renewable Natural Resources
Louisiana State University
Baton Rouge, LA 70803-6202

and

Chung Y. Hse
Principal Wood Scientist
USDA Forest Service
Southern Research Station
2500 Shreveport
Alexandria, LA

(Received December 2003)

ABSTRACT

Power companies in the United States consume millions of solid wood poles every year. These poles are from high-valued trees that are becoming more expensive and less available. Wood laminated composite poles (LCP) are a novel alternative to solid wood poles. LCP consist of trapezoid wood strips that are bonded by a synthetic resin. The wood strips can be made from low-valued wood and residues. This study evaluated the mechanical performance of small-scale LCP as affected by strip thickness and number of strips in a pole. The maximum bending stress of composite poles was comparable to that of solid poles of the same sizes. Thicker wood strips lead to stronger glue-line shear but poorer crushing stress. Number of strips in a pole was positively correlated to modulus of elasticity (MOE) and shear stress but negatively correlated to crushing stress. The results suggest that LCP with shell thickness greater than 50% of its diameter could be a possible substitute for solid wood poles. Thinner shells can be used by filling partially or totally the hallow core with other materials such as processing wastes.

Keywords: Composite poles, wood composites, LCP, shear strength, crushing strength, utility poles.

INTRODUCTION

Trees suitable for production of solid wood poles have long, straight, full-rounded boles with little taper. Southern pine (*Pinus* sp) is the main species for pole production in the U.S. About 72 to 80% of poles are from this species (Koch 1972; Micklewright 1989; USDA 1999). Due to the emphasis of the 60-year rotation in timber management practice, southern pine poles with lengths longer than 15.2 m have become less available in recent years. Therefore, such slow-grown species as Douglas-fir, ponderosa pine, and western larch are used to meet the demand for larger size utility poles (USDA 1999).

In the last decades, several approaches have been made to find alternatives to solid wood poles or reinforce solid poles to extend their service life. Marzouk et al. (1978) used four design

† Member of SWST.

[1] This paper (03-40-1494) is published with the approval of the Director of the Louisiana Agricultural Experiment Station.

schemes to make shorter solid wood poles longer by splicing or strapping two to four shorter poles using steel connectors. They presented three types of splicing and frame poles that are structurally suitable substitutes for power distribution poles. Tang and Adams (1973) showed that fiberglass-reinforced plastic could increase the strength and improve the durability of utility poles. The static and dynamic bending stiffness of the poles jacketed with fiberglass-reinforced plastic increased 17–21% and 14–19%, respectively.

Adams et al. (1981) show that wood composite poles can be fabricated using wood flakes, synthetic adhesives, and preservatives, and termed the composite poles COMPOLE. The COMPOLE series were 40-foot-long hollow poles with square, hexagonal, or octagonal cross sections. The poles were tapered according to the typical range found in solid wood poles. A computer program was also developed to design the poles and the optimal design resulted in poles that had a 7.5-cm wall thickness at a 33.8-cm ground-line diameter with an octagonal cross section. Shell thickness was reduced to 2.5 cm at the top.

Hollow poles have advantages over solid poles in cost, shipment, and installation. From a mechanical analysis standpoint, when a pole is subjected to a bending test, the bending stress is highest on the surface layer and zero in the center part due to the effect of moment of inertia. It is reported that 90% of a pole's bending strength is attributable to 22% of its diameter on both sides of the cross-section (Erickson 1995). Thus, taking some material from the center part will not markedly affect the service strength of utility poles. A conventional inspection method for poles in service also involves drilling to determine the shell thickness. A distribution pole is designated a reject if the pole shell thickness is 5 cm or less (Wilson 1992). Examples like these can be found in the poles made of other materials. Poles made of steel, concrete, or fiberglass are mostly hollow inside.

Mechanical properties and weathering properties are obviously the two important factors that decided the application potential of COMPOLE. Krueger et al. (1982) reported that the average modulus of rupture (MOR) and modulus of elasticity (MOE) of aligned composite wood materials (CWM) that are used to make COMPOLE were 110.8 and 16,250 MPa, respectively, which is comparable to those of southern yellow pine. The weight of COMPOLE, however, is 50% less than that of solid wood poles of the same class and length (Adams et al. 1981). COMPOLE were made of flakes and isocyanate adhesive under temperature and pressure. Preservatives were added to increase the resistance of COMPOLE to the biological attack.

Erickson (1994, 1995) proposed and patented another design of composite poles. The hollow veneered pole (HVP) consists of a truncated strip cone with three or more overwraps of veneer layers. Number of strips (NOS) in the cone could be 8 or whatever number is most appropriate for the manufacture of a given sized pole. Each strip can be made from either random or standardized lengths of lumber, and can be finger-jointed to pole length. The overwraps are from a high strength softwood veneer species. Veneer grain direction was parallel to the pole axis. The function of veneer layers was to improve the bending strength and protect the glued surfaces from weathering.

The alternatives to solid wood poles should have sufficient strength and stability for many years in adverse environments. The wood laminated composite poles developed in this study have these properties. In addition to the advantages that both COMPOLE and HVP have, wood laminated composite poles are more cost-effective, easier to make and treat, and more flexible in size and shape than COMPOLE and HVP. The objective of this study was to assess the mechanical properties of small-scale wood laminated composite poles.

STRIP SIZE DETERMINATION

Wood laminated composite poles consist of trapezoid wood strips that are bonded with synthetic adhesives. Strip sizes can be determined by mathematical calculation based on the parameters given. The known parameters are NOS in a

pole n, strip thickness at bottom T, radius (or diameter) of the circle surrounding the bottom of a pole R, tapering angle β, and pole height H. Then the central angle α can be calculated as

$$\alpha = \frac{360°}{n} \tag{1}$$

Other size measures can be determined by the relationship between sides and angles in triangles. Figure 1 shows a schematic diagram about a truncated composite pole from a cone and one of its strips. The formulas of other sizes are as followings:

Width of the larger size at pole bottom AB

$$\overline{AB} = 2R\sin\frac{\alpha}{2} \tag{2}$$

Width of the smaller size at pole bottom CD

$$\overline{CD} = 2\left(R\sin\frac{\alpha}{2} - T\tan\frac{\alpha}{2}\right) \tag{3}$$

Width of the larger size at pole top A'B'

$$\overline{A'B'} = 2(R - H\tan\beta)\sin\frac{\alpha}{2} \tag{4}$$

Width of the smaller size at pole top C'D'

$$\overline{C'D'} = 2\left(1 - \frac{H}{R}\tan\beta\right)\left(R - \frac{T}{\cos\frac{\alpha}{2}}\right)\sin\frac{\alpha}{2} \tag{5}$$

Strip thickness at the top T'

$$T' = \left(1 - \frac{H}{R}\tan\beta\right)T \tag{6}$$

Formulas 1 to 6 can be used to calculate the dimension of strips for a specific design of composite poles. If taper angle β equals 0, i.e., there is no taper in the pole, Eqs. (4) and (5) are the same as Eqs. (2) and (3), respectively, and T' equals T in Equation 6.

EXPERIMENTAL PROCEDURE

Experimental variables and design

Poles made in this study were small-scale composite poles. Table 1 shows the experimental variables and their levels. The length of composite poles was 122 cm and outside diameter 7.6 cm. These small-scale poles were used to assess basic factors that have effects on the mechanical properties of composite poles. Two variables were selected. They were strip thickness and NOS in a pole. The four levels of strip thickness were 1.0 cm, 1.5 cm, 2.0 cm, and 2.5 cm, which account for 26, 39, 52, and 66% of the pole radius, respectively. Strip thickness covers one-quarter to three-quarters of pole radius and all poles were hollow. There were 3 levels of NOS, which were 6, 9, and 12. Solid poles with the same length and outside diameter were fabricated to work as controls. All poles had no taper (i.e., in Fig. 1).

Table 2 presents the parameters for each NOS level of the strips with thickness 2.5 cm. The width of the larger side of other thickness levels is the same.

The experimental design was a factorial. The number of experiments was 12. Thirty-six poles were made with 3 replications for each combination of NOS and strip thickness levels. Three spruce (*Picea* glauca) and southern yellow pine solid poles were made for each of the 6-, 9-, 12-sided configurations. Nine spruce and nine southern yellow pine poles were used as controls of composite poles.

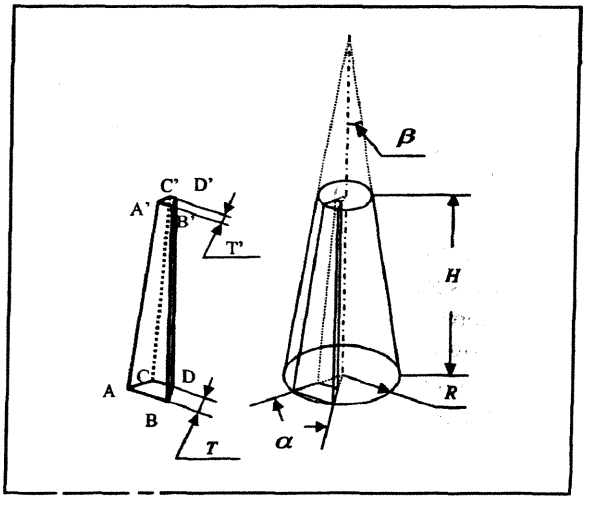

FIG. 1. A schematic diagram of a wood strip composite pole and one of its strips.

TABLE 1. *Experiment variables and their levels of wood composite poles.*

Pole type	Species	Diameter (28) (cm)	Length (H) (cm)	Thickness level (Th) (cm)	NOS[2] (n)	Number of poles
Composite Poles	SYP[3]	7.6	122	1.0, 1.5, 2.0, 2.5	6, 9, 12	36
Solid Poles	Spruce	7.6	122		6, 9, 12	18
	SYP	7.6	122		6, 9, 12	

[1] Referred to Fig. 1
[2] Number of strips in a pole
[3] Southern yellow pine

TABLE 2. *Strip parameters of wood composite poles.*

Number of strips (n)[1]	Cross-section (W) (cm)	Strip length (L) (cm)	Width of larger side (AB) (cm)	Width of smaller side (CD) (cm)
6	60	2.5	3.81	0.92
9	40	2.5	2.61	0.79
12	30	1.5	1.97	1.17

[1] Referred to Fig. 1

Materials and methods

Southern yellow pine (SYP) lumber with sizes 5.08 cm by 15.36 cm by 6.1 m and 5.08 cm by 20.32 cm by 6.1 m, was commercially obtained. The lumber selected had small (diameter < 1 cm) knots. The lumber was cut into 125-cm pieces and reduced to target thickness with a planer. The resulting lumber was cut into strips of specific target sizes using a table saw. The saw blade was turned to appropriate angles, as shown in Table 2, to form the target angles. The cutting plan is shown in Fig. 2.

Each strip was inspected for quality, and those with knots were removed. Strips were measured for weight and width of the larger side. After measurement, the strips were stacked in a constantly air-conditioned room for 2 weeks before gluing into poles. The glue used was resorcinol-phenol formaldehyde (RPF) resin and commercially obtained. Viscosity and specific gravity of RPF were 800 cps and 1.177, respectively.

Strips assigned to a pole were randomly selected from the stacked strips. Fifteen percent of setting agents was added to the glue, and the mixture was blended in a mixer. The glue was uniformly hand-spread onto the two sides of each strip at 310 g/m^2. Because both contacting surfaces had glue, some of the excessive glue was squeezed out from the glue lines after pressure was applied.

The consolidation of glued strips was performed in steel molds. Mold length was 137 cm. Glued strips were formed into a pole shape, tightened temporarily with plastic tapes, and then put into the lower half of a steel mold with 91.4-cm inside diameter. Rubber sheets were put in between poles and upper and lower halves of the steel mold. There were two functions of the

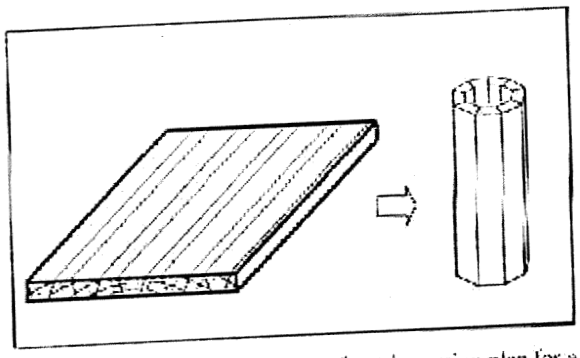

FIG. 2. A schematic diagram of a strip-cutting plan for a nine-strip composite pole.

rubber sheets. One was to prevent the poles from sticking to the steel. The other one was to provide a buffer to the wood strips of the pressure from steel, and thus to prevent the mold from crushing the wood strips. An impact wrench with 48.4 kg m of torque was used to tighten the screws on both sides of the steel mold. Poles were pressed in molds for 36 h in an air-conditioned room. They were then weighed, sanded, and stored in the same environment for 4 weeks before testing.

Four pieces of 5.08-×-25.4-×-243.8-cm SYP and spruce lumber were commercially obtained as the materials of the solid poles. The lumber was cut into 24 pieces of 5.08-×-7.6-×-121.9-cm lumber. Two pieces of the lumber were bonded into square wood with dimension of 7.62-×-7.62-×-121.9-cm using RPF resin and 9 pieces of such square wood were obtained for each species. Three of the 9 pieces of square wood were cut into 6-sided polygonal posts, three into 9-sided, and three into 12-sided posts for each species. The posts were kept in an air conditioned room for 4 weeks before testing.

Test

Flexural test. Flexural tests were conducted on a RIEHLE machine. Before the test, the control system of the RIEHLE was replaced by a new digital computer-controlled system. Figure 3 (a) shows the set-up of the test. One end of the tested composite pole B is fixed in the clamp of the supporting frame A. The pole was embedded 15 cm in the clamp. Figure 3 (b) shows the cross-section of the clamp, hard maple wood liner, and test specimen. The other end of the testing pole was tied to the crosshead E of the RIEHLE through a steel cable C and a pully D. When a test was conducted, the crosshead moved up along the spiral post F, imposing a concentrated load at the free end of the pole. The test was controled by computer H and the testing data are collected and stored.

Static bending tests were performed for both solid and composite poles. Loading speed was 51 mm per minute. Peak load and deflection values were recorded. In the first test, most composite poles failed at the clamped part, where the pole was split in the central plane. A second test was conducted on the poles after the clamped part in the first test was removed. In the second test, the clamped length was increased to 30.5 cm, and each sample was loaded to failure to obtain the maximum bending stress. Composite poles that had strip thickness of 2.0 and 2.5 cm failed at the clamped line, and composite poles that had strip thickness of 1.0 cm and 1.5 cm failed at the clamped parts as in the first test. Modulus of elasticity (MOE) of each pole was calculated from the load-deflection graphs. Table 3 gives the information of the bending test of both solid and composite poles.

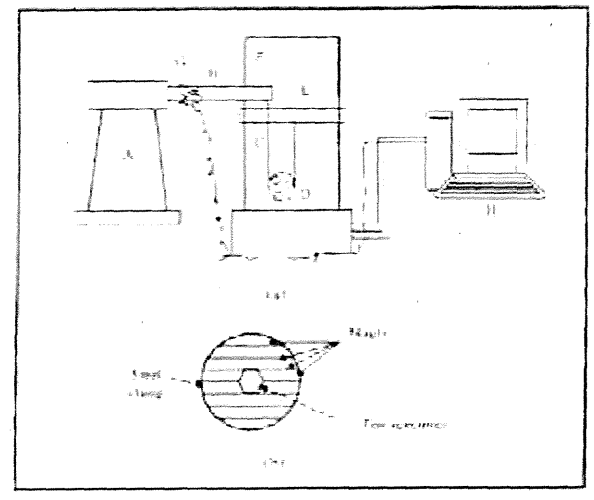

FIG. 3. A schematic diagram of the flexural testing device.

TABLE 3. *Failure modes of solid and composite poles in a cantilever bending test.*

Types of poles	Strip thickness (species)	Number of poles	First test	Second test
Composites	1.0 cm	9	Shear[1]	Shear
	1.5 cm	9	Shear	Shear
	2.0 cm	9	Shear	Normal[2]
	2.5 cm	9	Shear	Normal
Solid	SYP	9	Normal	—
	Spruce	9	Normal	—

[1] Shear failure of the longitudinal.
[2] Normal failure of the longitudinal.

After the second test, a sample measuring 5.1 cm was cut perpendicularly to the grain from the clamped end of each pole. The samples were measured for weight and then put in an oven at 100°C for 24 h. The moisture content at the time of test was calculated based on the weight of the samples before and after oven-drying. Specific gravity of the poles was not measured because of the difficulty of accurate measurement of sample dimensions.

Glue-line shear test.—After the bending test of each small-scale composite pole, four more samples measuring 5 cm each were removed from the same end as the moisture samples and used for the glue-line shear test. As shown in Fig. 4, each sample was first cut into two halves. One glue line was randomly selected from each of the halves. The laminations on both sides of the glue-line were reduced to 4.4 cm. Two of the samples were used to determine the glue-line shear in dry condition. The samples were kept in an air-conditioned room for 2 weeks and tested to failure. The maximum load and wood failure of each sample were recorded.

The other two samples for each pole were used to test shear in the wet condition. The samples were put in a container measuring 36 × 72 × 23 cm. Water in the container was heated to 50°C, and the samples were put 2.5 cm below the water surface. The water was heated to boiling in 2 h and samples were kept in the boiling water for another 2 h. At the end of the boiling test, the samples were taken out and immediately put in plastic bags. After the samples cooled to the ambient temperature in the bags, they were shear-tested to failure. The load of failure and percentage of wood failure on the glue-line were recorded. Load values in the wet condition and glue-line dimensions in the dry condition were used to calculate the shear strength for each sample.

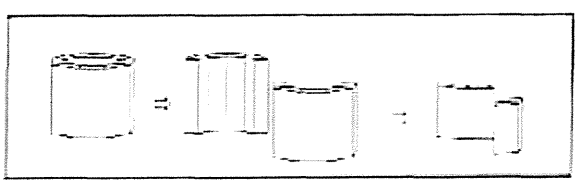

FIG. 4. A schematic diagram of a sample cutting plan for the glue-line shear test.

A standard apparatus was used to hold the samples, and an Instron machine was used to add the load. The testing procedure is similar to the standard ASTM D 1037 Glue-Line Shear Test (ASTM 1998) procedure except that the width of the samples was narrower because of the limited shell thickness of the pole shell. The shear stress at failure was calculated based on the maximum load and the glue line area, and the percentage of wood failure for each specimen was recorded after the test.

Crushing test.—After the second bending test, one more sample measuring 10.1 cm long each was removed from the rest of the pole after the glue-line shear test. The sample was used to test crushing strength. Sample placement in the test is shown in Fig. 5. One glue line was randomly selected from each sample, and the length and width of the glue-line were measured. Samples were tested diagonally on two selected glue-lines on the same diameter for 6- and 12-side polygons and tested on one glue-line on the 9-side polygons (Fig. 5). Maximum stress was calculated by the following formula:

$$S = \frac{P}{Lt} \tag{7}$$

where S = the crushing stress of a sample (MP_a); P = the maximum load applied to the sample (N); and L and t are the sample's length and glue-line width (cm), respectively. Samples were loaded to failure on an Instron machine and maximum load of each sample was recorded.

Data analysis

The analysis of variance (ANOVA) was conducted using SAS (SAS 1996) on the MOE, MOR, glue-line shear, and crushing strength as affected by the number of strips in a pole, strip thickness, species, and treatment conditions (boiling or non-boiling). A significant level of 5% was chosen. Fisher's least significant difference (LSD) was used to make pairwise comparisons among the levels in each variable.

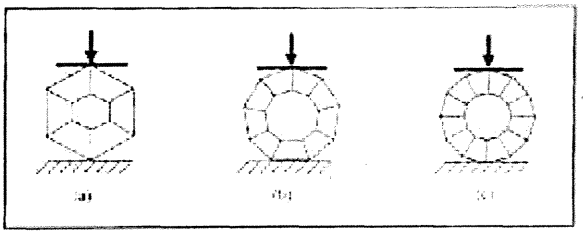

FIG. 5. Crushing test set-ups for wood laminated composite poles with 6 (a), 9 (b), and 12 (c) sides.

TABLE 4. *Shear stress of wood laminated composite poles in a cantilever-bending test*

Strip thickness (cm)	Shear stress (MPa)		
	6-strip	9-strip	12-strip
1.00	9.04 (0.17)	9.69 (0.34)	9.79 (1.52)
1.50	8.11 (0.72)	11.81 (0.16)	10.34 (1.10)
2.00	8.27 (0.81)	10.12 (0.19)	13.47 (1.06)
2.50	8.35 (0.13)	11.15 (0.70)	12.44 (1.90)

[1] Values in parentheses are standard deviation.

RESULTS AND DISCUSSION

Bending stress

In the first bending test, 90% of composite poles failed in a shear mode at the clamped part. This could be due to the shortness of the clamped end, but it also indicates that shear-failure can be an important failure mode for the hollow poles, especially for those with thin shells.

The shear stress was calculated based on the maximum load, first and second moment of inertias, and the results are shown in Table 4. Variations exist among the shear stress values for different thickness levels. Except for the 12-sided poles in the 2.0- and 2.5-cm groups, pole thickness had little effect on shear. ANOVA results show NOS had a significant effect ($p = 0.001$), but strip thickness showed little effect on shear stress ($p = 0.15$). The average shear values of 12 samples of each number of strip level were 8.4, 10.8, and 11.5 MPa for 6-, 9-, and 12-sided poles, respectively. LSD procedure was used to compare the effects among different strip thickness and number-of-strip levels. The shear stress of 6-sided poles was significantly lower than those of other two number of strip levels. The average shear stress values were 9.5, 10.1, 10.7, and 10.7 MPa for poles with 1.0, 1.5, 2.0, and 2.5 cm of strip thickness, respectively. These shear stress values may be used in future designs of composite poles.

The maximum bending stress of composite poles listed in Table 5 was obtained from the second bending test, and the maximum stress of solid poles in the table was from the first test. Although the two thinner shell poles (1.0 cm, 1.5 cm) failed in shear modes in the second test, their bending stress values were calculated and listed in Table 5 due to the small difference from those of thicker poles. It can be seen from Table 5 that the strength of composite poles was comparable to that of bonded solid poles. The data analysis showed that there was no significant difference between the MOR of SYP solid poles and their corresponding composite poles with the same number of strips in the 2.5-cm strip thickness level; but there were significant differences between solid poles and corresponding composite poles in the 2.0-cm strip thickness level. In the 2.0-cm groups, the strength of 6-, 9-, and 12-sided poles accounted for 90, 82, and 90% of corresponding solid ones, respectively. The maximum stress of spruce poles was

TABLE 5. *Maximum bending stress of wood laminated composite poles and solid poles.*

Pole types	Strip thickness / species	Maximum bending stress (MPa)		
		6-strip	9-strip	12-strip
Composite poles	1.0 (cm)	96.77 (1.16)[2]	91.85 (1.68)	52.91 (6.27)
	1.5 (cm)	96.76 (5.69)	90.02 (0.89)	80.53 (5.23)
	2.0 (cm)	101.37 (7.63)	80.85 (1.27)	99.46 (5.98)
	2.5 (cm)	106.16 (1.73)	108.86 (5.56)	97.80 (12.53)
Solid poles	Spruce	61.69 (13.65)	68.06 (4.38)	72.87 (1.15)
	SYP[3]	112.40 (2.35)	99.19 (4.57)	110.70 (5.51)

[1] Poles in these two thickness levels failed in shear in clamped part.
[2] Values in parentheses are standard deviation.
[3] Southern yellow pine.

TABLE 6. *Modulus of elasticity of wood laminated composite poles and solid poles.*

Pole types	Strip thickness/ species	MOE (10^9Pa) 6-strip	9-strip	12-strip
Composite poles	1.0 (cm)	5.77 (0.59)[1]	4.73 (0.31)	6.49 (1.02)
	1.5 (cm)	5.32 (2.33)	6.49 (0.82)	6.45 (1.40)
	2.0 (cm)	5.71 (0.58)	5.58 (0.73)	6.38 (0.17)
	2.5 (cm)	6.21 (0.89)	6.10 (0.67)	6.66 (0.33)
Solid poles	Spruce	5.35 (0.74)	6.42 (0.76)	6.24 (0.79)
	SYP[2]	8.12 (0.59)	7.95 (0.06)	7.65 (0.46)

Values in parentheses are standard deviati
Southern yellow pine.

less than that of SYP solid and most composite poles in three NOS levels.

Modulus of elasticity

Modulus of elasticity (MOE) of composite and solid poles is presented in Table 6. Variations existed among MOE values for different NOS and strip thickness levels. In general, MOE of composite poles was lower than those of solid poles within the same species. The maximum difference was 60%. Strip thickness was not correlated to the MOE of composite poles ($p = 0.3928$). There were no significant differences among the MOE values of different strip thickness levels in the LSD test.

NOS had a significant effect on MOE of the composite poles ($p = 0.0002$). The average MOE values were 5.3, 5.6, and 7.4 GPa for NOS of 6, 9, and 12, respectively. The MOE of 12-sided poles was significantly higher than that of 6- or 9-sided poles. This may be due to one or both of the following two reasons: (1) 12-sided poles have more glue-layers, MOE of which is higher than wood, and (2) 12-sided poles are closer to round poles and receive more uniform load from the mold.

Glue-line shear

Glue-line shear strength and wood failure in both dry and wet conditions are listed in Tables 7 and 8. In the dry condition, thinner strips had higher glue-line shear strength than the thicker strips. One exception to this finding was the 12-strip poles with strip of 1.5 cm in thickness, the shear strength of which was much higher than those in other groups. The percentage of wood failure of this group is lower than the others in the same thickness level (Table 8). Statistic analyses (ANOVA) shows that strip thickness was a significant source of variation for shear strength and wood failure in both wet and dry conditions. In the dry condition, average glue-line shear strength values were 9.54, 8.80, 7.98, and 7.56 MPa for thickness levels of 1.0, 1.5, 2.0, and 2.5 cm, respectively. The corresponding wood failure values were 50, 63, 69, and 72% for the four thickness levels, respectively.

The greater glue-line shear strength of poles with thinner strips may be due to the fact that thinner shells received more pressure than thicker shells. During the making of the poles, the same force was added to the molds. Thinner strips may receive greater pressure in the glue-line and have better bonding conditions because of their lower contact area between them. This indicates that proper pressure is necessary when making composite poles. Excessive pressure may cause the problem of squeezing glue out of the glue-line and lowering the bonding strength. However, that was not the case in this study. Among the four thickness levels, LSD results showed that glue-line shear strength of each level was significantly different from the others, meaning that shear strength increased with the decrease of strip thickness.

After the 2-hour boiling test, glue-line shear strength was reduced to 5.11, 4.84, 5.30, and 5.77 MPa, and the wood failure was 41, 39, 55, and 62% for the thickness levels of 1.0, 1.5, 2.0, and 2.5 cm, respectively. Poles with strip thick-

TABLE 7. *Glue-line shear strength values before and after water soaking of composite poles.*

Strip thickness (cm)	Dry condition (MPa)			Wet condition (MPa)		
	6-strip	9-strip	12-strip	6-strip	9-strip	12-strip
1.0	10.08 (0.79)[1]	10.15 (0.63)	8.39 (1.05)	7.01 (1.84)	4.97 (0.31)	5.33 (0.20)
1.5	7.84 (0.88)	9.71 (0.03)	8.85 (1.45)	5.58 (0.22)	5.34 (0.69)	4.96 (0.99)
2.0	5.96 (0.54)	7.68 (0.49)	10.29 (2.08)	4.61 (0.26)	5.20 (0.20)	4.81 (0.26)
2.5	7.33 (0.33)[1]	8.15 (1.15)	6.30 (1.08)	5.13 (0.14)	5.36 (0.33)	4.85 (1.05)

Values in parentheses are standard deviation.

TABLE 8. *Percentage of wood failure in the glue-line shear test of wood composite poles.*

Strip thickness (cm)	Dry condition (MPa)			Wet condition (%)		
	6-strip	9-strip	12-strip	6-strip	9-strip	12-strip
1.0	52.92 (35.22)[1]	54.06 (9.67)	54.42 (3.88)	48.42 (24.12)	38.75 (5.73)	35.14 (4.57)
1.5	63.61 (10.21)	70.22 (5.01)	54.50 (8.01)	47.50 (12.50)	24.03 (13.18)	46.25 (8.33)
2.0	72.81 (14.35)	75.92 (7.30)	57.72 (12.80)	72.28 (18.51)	54.89 (8.60)	44.92 (13.81)
2.5	73.81 (7.30)	68.75 (12.37)	72.00 (7.17)	67.17 (6.76)	70.83 (15.28)	46.67 (13.33)

Values in parentheses are standard deviation.

ness from 1 to 2.5-cm lost 46, 45, 34, and 24% of the original strength, respectively. Thinner poles lost more strength after the treatment. In the wet condition, poles with 2.5-cm strip thickness had the highest glue-line shear value and was significantly different from the others. There were no significant differences for the shear strength between the poles with thickness values of 2.0 and 1.0 cm, but both were higher than the ones at the 1.5-cm thickness level. Poles with thicker strips still had higher wood failure.

Another factor that affects shear strength and wood failure is the grain direction of the strips that form the glue-line. For the species used in this study, southern pine, earlywood and latewood alternatively appear on the cross section. The best scheme for the glue-bond consideration is that the grain planes on both surfaces are parallel to the glue-line plane. Under this condition, the materials on the two bonding surfaces are uniform, and good bonding quality may be expected. In this case, the tangential direction of a wood strip coincides with the radial direction of the pole and the radial direction of a wood piece becomes tangential in the pole. Another advantage of this arrangement is that the tangential movement of the pole will be minimized due to less shrinkage and swelling in the radial direction of the wood. The worst case for the glue bond is when the annual rings on both sides of the glue-line are perpendicular to the glue-line planes. If two latewood rings match up in a glue-line, they will adversely affect the bonding of the earlywood rings next to the latewood rings. Also if the tangential direction of the wood strips coincides with that of the pole, more shrinkage and swelling in the pole are expected. The effects of wood growth ring direction and the gluability of earlywood and latewood had a great effect on the physical and mechanical properties of the composite poles and will be further investigated in future studies.

Crushing strength

All samples failed at glue-lines that were parallel to the loading direction. Table 9 presents the maximum stress values of the pole samples. As expected, the crushing stress decreased with the increase of NOS. Figure 6 shows the breakdown of load vector P into two vectors P_1 and P_2 that are parallel to the directions of the two shell strips next to the glue-line being tested. P_1 and P_2 can be further broken down into two vectors. For example, P_2 can be broken down into two vectors, which are horizontal vector P_3 and vertical