SO-41
GTR
1 copy

United States
Department of
Agriculture

Forest Service

**Southern Forest
Experiment Station**

New Orleans,
Louisiana

General Technical Report
SO-41
February, 1983

Economics of Forest Tract Size: Theory and Literature

Fred Cubbage

CONTENTS

Page

INTRODUCTION 1
THEORETICAL ECONOMIC BASES 1
Cost Curves 1
Short-Run Average Cost Curve 1
Long-Run Average Cost Curve 2
Assumptions 2
Interpretation 3
Productive Significance 3
Terminology 4
Efficiency and Economics 4
Economies, Diseconomies, and Minimum Optimum Size 4
Size vs. Scale 4
Static vs. Dynamic 4
Private vs. Social Costs 5
Internal vs. External Economies 5
Pecuniary vs. Technical Economies 5
Returns to Scale Causes 5
Economies of Size 5
Utilization of Technology and Mechanization 5
Specialization of Workers and Equipment 6
Reduction of Resource Indivisibilities 6
Collection of Other Causes 7
Diseconomies of Size 7
Differences in Management 7
Measuring Economies of Size 8
Survivorship 8
Advantages 8
Disadvantages 8
Findings 9
Forestry Applications 9
Statistical Cost 9
Advantages 9
Disadvantages 9
Forestry Applications 10
Economic-Engineering 10
Procedures 10
Advantages 11
Disadvantages 11
Forestry Applications 11
FORESTRY LITERATURE 11
Forest Products Firms and Logging Enterprises 11
Large Forests 12
Forest Tracts 12
Scandinavian Studies 13
United States Forest Management 13
United States Forest Harvesting 15
ALLEVIATING SMALL TRACT PROBLEMS 15
Tract Aggregation 15
Methods 15
Measuring Success 16
Problems 16
Intensive Harvests 17
Small-Scale Equipment 17
Summary 18
Literature Cited 18

Economics of Forest Tract Size: Theory and Literature

Fred Cubbage

INTRODUCTION

Economics of forest tract size are crucial in determining the available wood supply in the United States. High average costs on small tracts are a primary obstacle to overcoming the underproductivity of forest lands, particularly those held by nonindustrial private owners. Effects of tract size on average costs are most important in mechanized operations. As forest regeneration, management, and harvest become more mechanized, economics of tract size will become more important.

In this paper, the theoretical bases of economics of size studies are surveyed and the forestry literature on economics of size is reviewed. Numerous theoretical and applied studies of economics of size exist, but they require modifications to be applied in forestry. World-wide forestry literature on economics of tract size is more substantial than commonly believed; summarizing it provides more knowledge on the subject in the United States.

THEORETICAL ECONOMIC BASES

Most theoretical literature on economics of size refers to industrial applications and most applied studies have been performed by agricultural economists. Both are reviewed here as a basis for studying economics of forest tract size.

Economics of size refer to the variation in average unit costs which can be achieved by varying the size of the operation (Gregersen and Contreras 1979). Economies of size are achieved when unit costs decline as the size of a manufacturing plant changes; diseconomies occur when unit costs increase (Heady 1952). Economies of size are generally achieved at higher levels of productive capacity, with capacity being measured in terms of the number of units of a standard product that can be produced per unit of time (Pratten and Dean 1965).

A rigorous definition of economics of forest tract size is elusive. Tract size economics refer to variations in average costs on different size land areas. Varying size tracts are the "industrial plants" producing a product (such as seedlings planted, trees thinned, or cords harvested). However, the actual firms in forestry are the owners or contractors performing work such as planting, thinning, or harvesting. Therefore, economics of forest tract size refer to variations in the costs of outputs (seedlings, thinned trees, cords) for firms operating on different size tracts.

The firms performing the forestry work are assumed to be of optimal size; their size is not the issue of concern and is usually assumed not to affect average costs. Actually, different size firms have average costs which vary by tract size. But economics of size studies assume that the firm with the lowest costs for a particular tract size will be the only firm operating on that tract size. Different size firms may be optimal on different ranges of tract sizes.

Cost Curves

Studies of economics of size rest on the determination and interpretation of the long-run average cost curve, which is in turn related to a number of short-run average cost curves.

Short-Run Average Cost Curve

A firm operates with a given set of fixed and variable resources which determine its short-run average cost curve. Fixed resources are available only in specified quantities in the short run, while variable resources are assumed to be unlimited. Short-run average cost curves are usually U-shaped. Average costs decline initially as fixed costs are spread over more output. Eventually, however, average costs level off and then rise as the variable resources must be added in increasing proportions to the fixed resources to reach greater levels of output.

Fred Cubbage was Research Forester, Southern Forest Experiment Station, Forest Service—USDA, New Orleans, La. Currently, Assistant Professor, University of Georgia, School of Forest Resources, Athens, Ga.

A separate short-run average cost curve applies for each level of fixed resources. Which resources are fixed in the short run is arbitrary, depending on the observed practices of firm managers, the length of the planning horizon examined, and the longevity of the resources involved. Fixed factors make no difference in the eventual shape of the long-run average cost curve, which is the basis for determining economies of size in the long run (Madden 1967).

Long-Run Average Cost Curve

In the long-run, all resources are variable, including those that are fixed in the short run. The long-run average cost curve of a firm is determined by drawing a curve tangent to a series of short-run curves for firms (or plants) with differing complements of fixed resources (fig.1). The curve indicates the average cost of production that would be experienced by firms of different sizes under assumed price relationships and technologies (Madden 1967).

The long run average cost curve has also been referred to as the scale curve (Pratten 1971), the planning curve (Heady 1952), and the envelope curve (Doll and Orazem 1978). The term long run is misleading, since the curve does not imply changes in costs as the size of the firm is increased over time. It actually shows the static effect of size on average costs of production for a series of alternative plants built at a point in time, each perfectly adapted to and operated at the required scale (Pratten 1971, Pratten and Dean 1965).

Viner (1952, p. 206) clarifies the distinction regarding the timeless nature of the long-run average cost curve and its implications: "The theoretical static long-run, it should be noted, is a sort of 'timeless' long-run throughout which nothing new happens except the full mutual adjustment to each other of the primary factors existing at the beginning of the long-run period. It is more correct, therefore, to speak of long-run equilibrium in terms of the conditions which will prevail after a long-run, rather than during a long-run. Long-run equilibrium, once established, will continue only for an instant in time if some change in the primary conditions should occur immediately after equilibrium in terms of the pre-existing conditions had been reached. The only significance of the equilibrium concept for realistic price theory is that it offers a basis for predictions of the direction of change when equilibrium is not established. Long before a static equilibrium has actually been established, some dynamic change in the fundamental factors will ordinarily occur which will make quantitative changes in the conditions of equilibrium. The ordinary economic situation is one of disequilibrium moving in the direction of equilibrium rather than of realized equilibrium."

Assumptions.—Each long-run average cost curve assumes that technology and factor prices are constant for the given time period (Lund and Hill 1979). It assumes that the latest technology is available to all entrepreneurs and that the short-run cost curves of various size plants are based on the latest technology. Latest technology does not mean using the same technique for all plants, but rather using the optimum technique from a variety of choices (Gorecki 1977). Factor prices, adjusted to

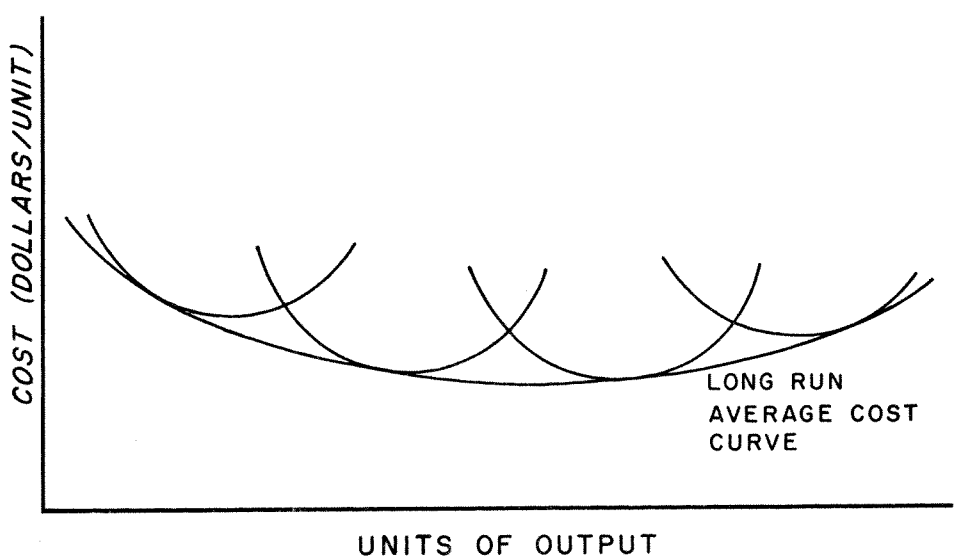

Figure 1.—*The long-run average cost curve.*

the same base year, are constant because they are assumed to be perfectly elastic for the individual firm (Madden 1967). Firms also are assumed to use factors in optimum proportions. If either factor, prices or technology, were allowed to change, the shape of the long-run average cost curve would change and render economics of size interpretations meaningless.

Interpretation.—Economies of size or scale occur where the long-run average cost curve drops down and to the right—where unit costs of production decline as the size of the plant increases. Strictly defined, diseconomies of size occur where the curve slopes upward and to the right. However, in forestry applications, high average costs on small tracts have generally been referred to as diseconomies of (small) size. This interpretation, while technically not correct, will also be used in this paper since it is the accepted terminology.

Combining the downward and upward sloping cost segments yields the U-shaped long-run average cost curve. In the long run in pure competition, the price of the output of a firm is determined by the lowest average cost or production—represented by the minimum point on the long-run average cost curve. A firm producing at its optimum plant size will be producing at the minimum point with its short-run marginal cost, short-run average cost, long-run marginal cost, and long-run average cost all being equal (Doll and Orazem 1978).

Empirical evidence suggests that the long-run average cost curve for most industries is more L-shaped than U-shaped. L-shaped curves indicate that there are economies of size up to a certain size of output, but beyond that point, average costs neither rise or fall much when size is increased. The point at which average costs cease to fall is known as the point of minimum optimum scale (Bain 1969, Pratten 1971). Scherer (1970) concuded that the cost curves of most industries are L-shaped, but do start turning up at very large sizes, reflecting diseconomies of scale. In forest land operations, long-run average cost curves are likely to be L-shaped since diseconomies are unlikely until very large sizes are reached. High average costs caused by small tract size are more relevant in forestry.

Most long-run average cost curves also are actually scalloped. Lumpiness of technology inputs makes the inputs usable only for a given range of plant sizes. Therefore the long-run curve actually combines many short-run cost curve segments, rather than being the perfectly smooth curve obtainable with perfectly divisible units of technology (Chamberlin 1948).

Productive Significance.—Three basic economic principles are important in using short- and long-run average cost curves in analyzing a firm's productive decisions (Madden 1967). First, in the short run, a firm will produce only if total revenues exceed total variable costs (price per unit exceeds the average variable cost). Second, in the long run, a firm will stay in business only if total revenues exceed total costs (price per unit exceeds average total cost). Third, under conditions of atomistic competition (perfect competition with many small firms), prices will gravitate toward a level such that pure profits will tend to be erased. The return to each resource will be just enough to keep it from going into other uses.

In manufacturing plants, these economic principles tend to eliminate inefficient producers who suffer from too large or too small a scale. Applying these principles to economics of forest tract size depends on the definition of the forestry firm. In a "firm" composed of an owner's tract of land, owners will produce timber only if the total revenues (timber sales) exceed the total variable costs (harvesting costs), so the short-run dictum is valid. However, the long-run situation is less applicable in timber production situations. Long-run costs of growing timber may exceed revenues. According to economic theory, forest lands would therefore cease active timber production and move into other uses. However, they can drift out of active timber production and still remain forests with an increasing growing stock since they produce joint products and may be owned for multiple objectives. Fixed costs such as management and taxes are borne by other products for many owners. Only at the time of potential harvest will these lands be considered for timber production, so often only the short-run interpretation applies.

Where firms are defined as contractors performing services (planting, thinning, harvesting), the three principles apply as stated. Planters or loggers will operate only if their price received per unit exceeds average variable costs in the short run. Total revenues must exceed total costs in the long run. And prices for logging or planting contractors have tended to eliminate pure profits.

In the economics of forest land size, it is the tract as a measurement unit or "firm" or "plant" which is the most applicable interpretation. Although tracts are not production operations in the conventional sense, they are the unit of interest in studies of average costs of forest management. Small tracts are likely to have high average costs for forestry treatments. They drift in or out of active timber production depending only on the current short-run comparison of costs and revenues (or anticipated revenues, as in the case of planting and timber stand improvement). Contracting firms are assumed to be the appropriate size to perform the work on various size tracts, and are not the "firm size" being studied.

Terminology

Economics of size studies use a plethora of terms which should be defined, clarified, or delineated for their use in forestry.

Efficiency and Economies

Economies of size are related to efficiency but achieving the most economic size does not guarantee that an operation is efficient and vice versa. Efficiency has many components. It is not easy to define nor necessarily universally desirable.

A firm is *technically efficient* if its production function yields the greatest output for any given set of inputs, given its particular location and environment (French 1977). In practice, firms are seldom technically efficient. Their actual performance relative to the production frontier has been called "X-efficiency" (Leibenstein 1966). The "X-factors," such as motivation, dedication, and aggressiveness of employees and entrepreneurs, determine a firm's success at operating on the production frontier. Lund and Hill (1979) note that an efficient firm always operates somewhere tangent to the long-run average cost curve. However, different firms have varying degrees of efficiency. Differences in X-efficiency will be reflected by firms of average efficiency having higher per unit costs than firms of best efficiency.

A firm's *pricing efficiency,* or preferably its allocative efficiency, requires that it combine inputs so that the marginal revenue products are equal to the factor prices (or marginal factor costs). The product of the index of technical efficiency and the index of allocative efficiency is a measure of the economic efficiency of a firm. A plant may be both technically and economically efficient for its scale but inefficient with respect to optimum scale (French 1977). Generally, however, efficiency improvements referred to in economics of size studies refer to movements along the long-run average cost curve toward the optimum scale, and will be so considered here.

Economies, Diseconomies, and Minimum Optimum Size

Economies of size are reflected in decreasing costs per unit of output and diseconomies are reflected in increasing per unit costs. Most literature suggests that inefficient scale of firm occurs at very small or very large plant or firm sizes. Efficient scale usually occurs at medium to large firm sizes. As stated before, forestry diseconomies of size refer to high average costs on small tracts. Traditional economic literature, however, uses the term "diseconomy" only to refer to high average costs incurred by excessively large firms.

If the long-run average cost curve is U-shaped, the minimum efficient size or minimum efficient scale is the lowest point on the curve. This point may also be called minimum optimum size or scale, the optimum size, or the optimum scale. If the long-run average cost curve is L-shaped, the minimum efficient size or scale occurs at the crook of the L. In cases where the crook is indistinct and unit costs represented by the bottom of the L drop only slightly, various graphical and quantitative criteria have been used to determine the minimum efficient size. For example, Pratten (1971) states that minimum efficient size in industries is obtained at that scale ". . . above which any possible subsequent doubling in scale would reduce total average unit costs by less than five percent . . ." Defining a given percent slope (i.e. one or five percent) of the cost function as the minimum efficient size may also be acceptable.

Size vs. Scale

Economies of size, economies of scale, or returns to scale refer to variations in unit costs with changes in a firm's output. Pure scale relationships occur only if all the resources that go into production are increased in the same proportion. Economies of size refer to moving along the firm's long-run expansion path; inputs are combined in that particular ratio which minimizes costs for a given output. Inputs are not added proportionately, but by their productivity according to cost. The expansion path is not identical to the scale line (Heady 1952, Madden 1967, Doll and Orazem 1978). Chamberlin (1948) writes that there appears to be no reason to maintain a constant proportion of factors unless entrepreneurs ". . . harbor and interest in the mathematics of homogeneity which submerges their ordinary entrepreneurial objective."

Hence, economies of size is the more widely used and more appropriate term for variation in unit costs (Stanton 1978). In practice, the terms economies of size and scale are used interchangeably, but *always* refer to movement along the expansion path, not the scale line.

Static vs. Dynamic

Economies of size are defined in essentially static terms. Firms using differing fixed factor combinations determine the long-run average cost curve at a point in time, with unit costs usually lower for larger output levels. In a dynamic interpretation, unit costs might fall over time as the cumulative volume of output increases due to the

accumulated experience and skill of production engineers, supervisors, and workers (Scherer 1970, Pratten 1971). Generally the static, or more appropriately, timeless (Viner 1952) interpretation of economies of size is the more correct and common approach. However, the applications are dynamic: firms attempt to move toward the optimum size over time.

Private vs. Social Costs

Most studies use market prices for valuation and determination of optimum size. The resultant private financial optimum may not be a social optimum since consideration of everything at market prices may underestimate or overestimate the social cost of production (Saving 1961). In addition, nonmarket costs may affect the accuracy of optimum size calculations. Evaluation of economics of size in private terms does not prohibit examination of social implications such as industrial concentration, effects of increasing farm size, or problems of small forest tract size.

Internal vs. External Economies

Economies of size in a firm may arise either internally or externally. Internal economies are the direct result of actions taken by the operator or firm. Examples include overcoming input indivisibilities, reducing project lumpiness, specializing the production process, or improving marketing (Heady 1952, Doll and Orazem 1978). Low economic returns for small forest tracts might be improved by internal economies such as sharing the use of machinery, combining tracts to allow specialization, or combining tracts to achieve more market power.

External economies occur as a result of forces outside the firm, such as in a decreasing cost industry. Examples include quality of local transportation facilities, stability of government programs, access to banking and credit systems, improvement of machinery, and public support of research and education (Doll and Orazem 1978). Research on small-scale technology in forestry, subsidy programs giving preferential treatment to small forest landowners, and long-term logging contracts provided by forest industries are examples of external economies in forestry. External factors can be important in determining cost variations by tract size.

Pecuniary vs. Technical Economies

Economies of size may be pecuniary or technical in form. Pecuniary or market economies consist mostly of discounts which may be available to larger firms that purchase factors of production or credit in large lots. Price bonuses for large sales are also a form of pecuniary economies (Heady 1952, Sundquist 1972, Hall and LeVeen 1978). The social desirability of pecuniary diseconomies is dubious, since they lead mainly to a redistribution of income, benefitting large firms at the expense of input suppliers or small firms (Scherer 1970). In forestry, pecuniary diseconomies are more significant as a penalty in the form of sales discounts which may be received when selling timber from small tracts.

Technological, technical, or real economies of size offer the most promise for firms to improve efficiency. They are realized when a firm makes better use of labor, material, and capital inputs with increasing size. Economists consider real economies of size to be clearly beneficial, since the resources saved can be put to work satisfying other wants (Scherer 1970).

Technological economies often result in substitution of mechanical processes for labor in less efficient firms. Technological economies in forestry are leading to concern regarding input indivisibilities and higher fixed costs.

Returns To Scale Causes

Economies of Size

Frequently cited causes of decreasing unit costs of production with increasing firm size include overcoming indivisibilities, reducing per unit overhead costs, improving division of labor, reducing inventory requirements, and making better use of technology.

Utilization of Technology and Mechanization.—Improved utilization of technology and mechanization often causes economies of large firm size. Large firms may use qualitatively different and technologically more efficient units or factors, particularly machinery. Large size allows firms to select factors from a greater range of technical possibilities (Chamberlin 1948). It also allows use of large equipment which is too expensive for small operations. Increased use of capital equipment may permit large firms to overcome production bottlenecks which are foisted on small firms.

While technological breakthroughs and mechanization increase efficiency, they also tend to increase the optimum firm size for two reasons. First, mechanization usually takes place on a relatively large scale. Therefore, a mechanized firm must produce a larger output than must a labor-intensive firm to recoup its increased fixed costs for equipment amortization.

Second, mechanization may encourage a larger firm by reducing the requisite labor force and

minimizing labor coordination problems (Savings 1961). These reasons combine to make average total costs for large mechanized firms less than for small mechanized firms. The smaller the scale of mechanization and the less the equipment costs, the smaller are the differences in average costs between large and small firms.

Improvements or cost reductions in technology will shift relative factor use from labor to technological capital. Technological innovation leads to new least-cost combinations by changing the marginal productivity of factors, the factor prices, and the input mix (Doll and Orazem 1978). The substitution of machinery with high productive capacities for labor has enabled achievement of the greatest cost economies in recent years (Sundquist 1972).

The relative advantage of a large unit depends on the cost and availability of labor compared to the cost of capital in the form of high-capacity machinery. If labor is plentiful and capital scarce, more labor is likey to be used, and vice versa. If there are low marginal wages and high marginal machine prices, small firms would have an advantage over large (Heady 1952, Doll and Orazem 1978). An increase in the wage-rental ratio would tend to increase the minimum optimum size (Levin 1977).

The small-scale producer may often find no advantage in adopting new technology because it will be idle much of the time and cannot be scaled down. This leaves the small operator with a small output which must bear the full burden of the machinery capital costs. Even if large producers use the same machines, they have the advantage of longer production runs and lower proportional set-up times, which give them lower costs (Scherer 1970).

Technological innovation and subsequent mechanization are the most important factors affecting economics of forest tract size. Most mechanization of forest operations has occurred in the last 30 years. It has significantly altered the relative factor costs of labor and machine capital and shifted the minimum economic size of forest operations to larger tracts. Mechanization has had the most significant impact on the long run costs of forest regeneration and harvesting. Larger and more expensive equipment is being used to prepare, plant, and harvest forest stands, requiring increased production rates, longer production runs, and fewer moves and set-ups to be economical. This trend has made treatment costs for small tracts prohibitive.

Specialization of Workers and Equipment.—Increased firm output provides greater opportunities for specialization of the labor force and of capital equipment. This improves efficiency and encourages economies of size. Increased mechanization in forestry has allowed increased specialization of the labor force. Specialized harvesting machines require trained operators who may perform best operating only one type of machine, but are very efficient at performing their particular task. However, specialization is possible only with very large logging firms.

Reduction of Resource Indivisibilities.—Many resource inputs are available only in discrete units rather than in completely divisible forms. Discrete or lumpy inputs are available to the firm only in whole quantities or specified size units such as tracts of land or pieces of machinery. Divisible inputs such as electricity or fuel are available in desired quantities.

Divisible resources are fully utilized and discrete resources are often underutilized because of their different capacities, even with well-organized firms. The smaller the incremental unit of a discrete resource relative to the total quantity used by the firm, the closer the firm can come to full utilization of other discrete resources. Fuller utilization of discrete resources is a partial means of reducing the average cost of production as the cost of the resource is spread over more units of output (Madden 1967). Full utilization of one resource may not be compatible with full utilization of another, but large firms are more likely to achieve the lowest common denominator at which all lumpy inputs can be fully utilized.

Chamberlin (1948) noted that indivisibilities only make the average cost curve scalloped instead of smooth. He reasoned that increased specialization and the use of technologically more efficient units were far more important than indivisibilities in determining economies of size.

Nevertheless, in forestry, initial indivisibilities are one of the most important causes of economies of large size. Indivisible fixed costs for equipment and transport to the site are the key factors determining economic forest tract size (Row 1973). For example, the proportion of indivisible fixed units of administration, management, and supervision in relation to the quantity of productive man-hours is much greater on a small harvesting operation than on a large one (Ormrod 1974).

Many types of equipment and labor are divisible in the sense that it is possible to build units with smaller capacity and employ less expensive labor, or to employ staff on a part-time basis. However, the cost per unit of capacity may be higher because the factors, if purchased in small quantities, may be less efficient (Pratten 1971).

Farmers attempt to overcome resource indivisibilities by sharing equipment. Similar efforts are

less likely to be successful in forestry since competing contracting firms own the equipment and would be less likely to share than individual farm owners. Indivisibilities may be overcome by aggregating tracts to reduce machine set-up times and extend their production runs to achieve greater efficiency. Improved efficiency of small machines could also reduce the optimal forest tract size.

Collection of Other Causes.—Economies of size may be created by various other factors. Returns to management increase up to a point. Mastery of a given technique—the learning effect—pays off more on a large scale. Pecuniary economies of size may occur through purchase discounts (Doll and Orazem 1978).

There may be economies in massed resources or large numbers. A large business needs proportionately smaller parts inventories or proportionately fewer back-up machines than a small business to avoid risk. Large firms can also spread the risk and uncertainty of an enterprise over more units of production. Firms may also exert pecuniary economies by being large enough to monopolize the market (Pratten and Dean 1965, Pratten 1971).

Most of these reasons for lower unit costs are not too important in forestry. Management and learning effects may slightly increase the efficient use of new technology. Forest management operations and timber sales are usually so small that purchase discounts or sales premiums are not significant. Competition is so atomistic that monopoly power for fiber growers is virtually nonexistant. Row (1973) concluded that large tracts have an advantage of reduced risk from fire, insects, and disease. However, risk advantages probably lower the long-run average cost curve only slightly.

Circumference-area-volume relationships may be important sources of economies of size (Giaver and Seagraves 1960). In forest operations, large tracts which are roughly square or circular in shape will usually be more economic than those which are narrow and long because the timber will not have to be skidded as far (Kondo and Morioka 1965). Naturally, there are also greater economies in harvesting large trees than in small trees. However, tree volume relationships are more likely to confound the examination of economics of tract size than to determine the economic tract size.

Diseconomies of Size

A firm eventually reaches a point where economies associated with improving the use of large inputs and the spreading of fixed costs are completely exhausted and average costs of production begin to rise. In excessively large firms, a manager's talents can become spread too thin and he ceases to make effective decisions (Scherer 1970, Doll and Orazem 1978). The more variable, complex, and uncertain the resource, the greater the strain of size will be on the manager's talents and on firm coordination and operation (Madden and Partenheimer 1972). Interpersonal communication and supervision problems tend to be more serious as the number of employees increases. Large operations have more problems supervising employees and coordinating their activities with machinery and other factor inputs (Madden 1967). Large firms are less flexible and therefore less able to change their products to meet market requirements (Pratten and Dean 1965, Raup 1978a), promoting inefficiencies and diseconomies of scale over time.

Transportation costs are important in determining diseconomies of large scale—costs increase with distance (Scherer 1970, 1973). Diminishing returns to all factors of production also cause diseconomies. In particular, if there is a fixed factor such as entrepreneurship, the long-run average cost curve will rise due to diminishing returns to that factor alone (Chamberlin 1948). Similarly, technical forces such as limits on machines may cause diseconomies (Pratten 1971).

Most conventional reasons do not cause diseconomies of large tract size in forestry. Most tracts are too small for problems such as poor coordination, overextended managers, or diminishing returns. Transportation costs could cause diseconomies of size. Large forest tracts needing extensive road networks or that are distant from markets might have rising average costs of production. In practice, diseconomies of large forest size are so rare that few have been documented.

Forest contracting firms could become too large if machines begin to interfere with each other or managerial talents are spread too thin. But the small crews common in forestry preclude such problems. In fact, literature references to diseconomies of forest tract size always apply to small tracts having high average costs.

Differences in Management

Differences in management abilities and allocation of returns to management are important in determining returns to size. Increasing firm size requires added managerial inputs and talents. Large firm sizes require management to be more attuned to producing rates of return competitive with alternative opportunities for investment and resource use. Labor management skills must also increase with large firms (Sundquist 1972). For

these reasons, management tends to be more efficient on large firms than on small firms.

In addition to efficiency differences, the accounting methods for calculating the returns to management are critical in determining whether economies of size studies will find increasing, decreasing, or constant returns to size. In practically all agricultural studies, which are similar to forestry situations, returns to labor, capital, and management are calculated as residuals after imputing values to other resources and assuming constant returns to those resources (Olson 1956). It is the calculation and allocation of the residual claimant to management which determines the efficiency of an operation and its average costs (Madden 1967). Improperly calculated returns to management will lead to erroneous conclusions regarding economies of size.

Measuring Economies of Size

Several approaches have been developed to measure economies of size. Each has advantages and disadvantages. The appropriate method depends on the situation and industry being examined, the data available, and the purpose of the study. The approaches generally fall into three categories: survivorship, statistical cost, and economic-engineering.

Survivorship

The survivorship technique is based on the Darwinian principle that only those firms which operate at or near the most efficient size will remain in business over time. The technique determines the optimum size by formalizing the logic that sensible men use efficient size industries. It reveals optimum firm size in terms of private costs and the total economic environment of the firm (Stigler 1958).

The method examines the proportion of industry output accounted for by each plant size group for two or more time periods. Size classes that exhibit a declining proportion of an industry's capacity through time are deemed to be inefficient. Conversely, an increasing proportion of the industry's capacity in a larger size class is taken as prima facie evidence of efficiency and economies of size (Madden 1967, Gorecki 1977).

Advantages.—One of the primary advantages of the survivor technique is that it provides a positive measurement of the economies of firm size. Stigler (1958) asserts that until the development of the survivor technique, ". . . economists have been ignorant of the optimum size of firm in almost every industry all of the time . . ." Since its development the technique has been widely used to measure economies of size in many industries. It uses readily available Census of Manufactures data or similar data on firm size (Saving 1961). The technique usually works best with atomistic industries (Shephard 1967).

Survivorship measures the ability of the firm to survive in its total economic environment. It accounts for institutional or market factors which influence firm survival as well as private costs. The problems of valuation of resources and the hypothetical nature of technological studies are avoided by the survivor technique. It determines private efficiency by including all the problems the entrepreneur may face, such as strained labor relations, rapid innovation, government regulation, changing factor prices, and unstable foreign markets. Of course, social efficiency may be a different thing and is not measurable by the survivorship technique (Stigler 1958).

Disadvantages.—Critics of the survivor technique are numerous and vocal. Even if the survivorship technique does tell who survived, it does not provide reasons why they survived nor indicate if they will survive in the future. Inefficient firms may persist for reasons which are unpredictable from one industry to another. Reasons may include favored treatment from government programs, securing hired productive services such as labor at lower prices, or entrepreneurial absorption of losses (Bain 1969).

Shephard (1967) discusses a number of limitations of the survivor technique, particularly regarding its use based on Census of Manufactures data. He concludes that the method cannot be used on its own and that its estimates need to be screened against other evidence, such as static size distribution and analysis of the influences at work on plant size. Scherer (1970) concurs that survivorship is best employed as a check on other techniques due to its ambiguities. He writes: "Survival patterns are not always stable over time; curious patterns appear (such as survival of only the largest and smallest plants); and the criteria for distinguishing surviving from nonsurviving size groups contain a certain element of arbitrariness. Tests on the same industries by different analysts have sometimes yielded quite different estimates."

Also, the method gives no insight why some firm sizes are decreasing. It may be that small firms are more efficient but choose to grow because they can make higher total profits with higher volumes and less efficient operations. This drawback may even undermine the usefulness of the technique to pinpoint efficiency. Another serious weakness of the method is its measure of size—a firm's

proportion of the industry's total productive capacity. The measure is highly elusive, particularly when an industry's capacity is changing (Madden 1967).

Perhaps the most serious drawback to the survivor technique is its inability to forecast the shape of the long-run average cost curve or give one a direct look at the cost structure of the firm (Pratten and Dean 1965). It provides no guidance to entrepreneurs planning technical specifications for efficient and profitable plants (Pratten and Dean 1965) nor does it give an estimate of the capital return to entrepreneurship which might vary significantly from firm to firm and influence the size of firm which will survive. As the technique implies, firms may survive due to economies of size by moving along the long-run average cost curve. They might also survive due to different managerial abilities among entrepreneurs, together with the natural desire to increase net annual income or total wealth by a horizontal move along the long-run cost curve (Seckler and Young 1978). Survivorship provides no clues as to which effect dominates.

Findings.—Estimates using the survivor technique have customarily found a fairly wide range of optimum sizes. The long-run marginal and average cost curves of the firm are customarily horizontal over a long range or sizes. This finding is corroborated by the fact that if there were a unique optimal size in an industry, increases in demand would be met primarily with proportional increases in the number of firms. In practice, it appears that most increases in demand are met by expansion of existing firms (Stigler 1958).

Forestry Applications.—The survivor technique has limited uses in forestry. It is designed to analyze manufacturing industries which have data available on plant size and output. Therefore, it would be a workable tool for examining economies of size in forest industries such as sawmilling, logging, or pulp and paper making. However, it provides little guidance in measuring economies of forest tract size. A modified use of the method has been used to examine relationships between harvesting equipment size and tract size (Thienpont et al. 1976).

Statistical Cost

Descriptive and statistical methods to estimate economies of size can be classified under the heading of statistical cost. Descriptive cost analysis involves collection of cost data from business records and surveys (Wills 1956) and analyzation of the average costs for each plant and cost components among plants. Variations in costs among plants are explained in accordance with the variations in class averages and other factors thought to affect costs. The method is still widely used but has limited applications and value (French 1977).

Statistical cost analysis is based on direct analysis of actual firm records, as is descriptive analysis. Statistical cost looks at firm inputs, costs, and outputs and uses a statistical method to calculate the per unit cost. To determine the shape of the long-run plant cost curve, the analyst usually relates average production costs for a wide cross section of plants to output from those plants. Time series data could be used if technology and factor prices are constant. Additional factors such as percentage of capacity utilization, differences in the age of capital stock and technology, changes in input and output prices, and differences in the volume produced must be accounted for (Scherer 1970).

Advantages.—The statistical cost method is quick and inexpensive if a firm's records are available. Since this method is based on actual costs, some people believe the results are more reliable than the results of a synthetic analysis in which hypothetical plants are constructed based on economic and engineering data reflecting advanced or better-than-average technologies (Madden 1967). Also, the method does not require extensive development of complex production functions or intricate processes.

Disadvantages.—Critics of the statistical cost approach to measuring costs and efficiency are nearly as vocal as those of the survivorship method. Complete, reliable data sufficient for statistical generation are hard to obtain. Different cost accounting methods may impair the comparability of data between plants. The economic rents imputed to specialized resources, the capital returns to entrepreneurship, and the estimates of capital costs may be widely disparate or totally unavailable. If firms do not produce a homogenous product, it is not possible to compare output strictly in terms of the number of units produced. Quality differences and market imperfections make cost differences hard to compare. Any weighting system which tries to account for all these differences is likely to use judgments which may be inaccurate since it is impossible to obtain enough detailed information to make such calculations (Pratten and Dean 1965, Madden 1967).

Miller (1977) notes that statistical costs are also likely to understate effects of scale on productivity because they only measure existing firms which have managed to survive. Those with productivity too low to survive are automatically excluded from the sample. The remaining small firms have special

advantages, such as unusually good management or specialization in low volume products, which enable them to do better than would be expected for firms their size. Therefore, the average unit costs will be underestimated at small firm sizes.

Also, statistical cost is likely to estimate a long-run average cost curve that is higher than the true envelope curve. Least-squares regression, if fitted to cost data from efficient and inefficient producers, will result in a curve that goes somewhere through the middle of the points. The true long-run curve would more nearly correspond to the bottom edge of the scatter diagram. Therefore, average total cost data obtained from actual firm records do not constitute valid evidence of technical economies of scale (Madden and Partenheimer 1972).

French (1977) contains a detailed discussion of the data specification and measurement problems encountered in statistical cost analysis. His review concludes that so many different results can be achieved using the same data, even at statistically significant levels, that cost functions derived from cross-section data are not to be trusted. He adds that statistical cost analysis cannot accurately determine the long-run average cost curve and the appropriate sizes to take advantage of economies of scale. In fact, statistical cost methods have led to no concensus regarding the general shape of the long-run average cost curve despite the prevalence of the method.

Forestry Applications.—The statistical cost approach could be used in forestry to estimate the long-run average cost curve for sawmills, pulp mills, or logging firms. For example, Berndt et al. (1979) used the technique to estimate logging costs in British Columbia. Nevertheless, applying the method to measuring economics of forest tract size has serious drawbacks. Cost and return data for different tract sizes might be obtainable. However, the wide variability of factors which influence those costs would impair comparability of even similarly sized tracts. Likewise, the tremendous variability in the uses and quality of the product would make valid comparisons questionable. The problems suggest that, while it is possible to estimate cost functions statistically, the results and applicability to forest management situations are limited.

Economic-Engineering

The economic-engineering method synthesizes production and cost functions from engineering, biological, or other detailed specifications of input-output relationships into a hypothetical synthetic firm. It has also been called the synthetic firm approach, engineering approach, or building block approach (French 1977).

The approach develops budgets for hypothetical firms using the best available estimates of the technical coefficients—resource requirements or expected yields—and charging market prices or opportunity costs for all resources (Madden 1967). Using the production functions and cost data for the firm, the long-range average cost is determined and can be used to estimate the economics of size. Successful application requires good engineering data, realistic production functions, and good input and output prices. Production and cost function estimates may be based either on cross-section or time series data. They may take various mathematical forms such as linear, quadratic, or exponential functions. They may also use different statistical methods such as single equation least squares, covariance matrix, factor shares, or instrumental variables (Walters 1963).

Synthetic firm analysis is appropriate to answer two research questions (Madden 1967). First, what average costs could firms potentially achieve using modern or advanced technologies? Second, what differences in average costs are attributable strictly to differences in firm size, and not to differences in degree of plant underutilization, use of obsolete technologies, or substandard management practices? Its ability to answer these questions makes synthetic firm analysis unique.

Procedures.—The economic-engineering method requires four steps, as summarized by French (1977):

1) The production systems and organization of the activities in the firms being studied must be described.

2) Alternative production techniques at each production stage must be considered to develop the cost curves.

3) The total firm production is obtained by combining the production functions for various stages or components.

4) Once the underlying input-output relationships have been specified, the cost functions are determined by mutiplying the input prices times the quantitites of inputs used.

Equipment capacities may be determined by measurements in selected plants or from manufacturer's and engineer's specifications. Observations need to be made of space requirements for equipment use, storage, and production, and also for traffic movement. Variations in crew organization, equipment use, or work procedures may be possible. Labor performance data needs to be estimated by field time studies, standard work tables, personnel interviews, or payroll inspection. Costs for machine time need to be calculated. Input-output standards with time for rests, delays, breakdowns and the like

need to be developed. Production rates for the processes need to be determined. The input-output relationships need to be formalized into mathematical production functions. Often, manufacturer's historical data can be used to serve as a check on the data and to establish the credibility of the component production functions.

Short-run cost functions must be developed using the production functions. Next, the long-run cost functions are developed by one of two methods. The most common practice has been to construct several model plants of varying capacities and then to fit envelope functions to the short-run curves either implicitly or explicitly. Where there are several alternative production techniques at several stages, the most efficient procedure may be to estimate the long-run cost functions by stages and then to combine the cost functions into a total long-run cost function.

Advantages.—The economic-engineering approach avoids many of the problems encountered in strictly statistical studies. It can be applied in cases where accounting record data are not available and can more readily handle multiple products and dynamic cost functions. It is usually the only approach possible when the objective is to compare methods or develop improved methods of operation (French 1977). A principal advantage of the engineering approach is that it enables other conditions such as the state of the arts, the quality of the factors of production, and relative prices to be held constant when making estimates (Pratten and Dean 1965). The method has some disadvantages, but is generally considered by most economists to provide the best single source of information on the cost-scale question (Scherer 1970, Gorecki 1978).

Disadvantages.—The disadvantages of the economic-engineering approach are not as serious as the other two methods, but should be mentioned. The approach seldom finds any diseconomies of large scale because it usually uses constant input proportions for management, sales, and service activities (Stanton 1978). Practically, this is a fairly small distortion, particularly in forestry, since the firm long-run average cost curve is often L-shaped. The method is best at estimating technological production functions but often makes crude guesses on nontechnological aspects such as marketing costs, transportation, and labor relations. This shortcoming can be ameliorated by using better information from cost accountants and managers to quantify these factors (Gorecki 1977). There may also be problems in representing the process as a whole because individual processes may interact with one another to prevent strict additivity. Allocating joint factor costs is also difficult in evaluating the output of one product (Walters 1963).

The economic-engineering approach places heavy demands on the investigator's time and finances. The amount of technical data required to synthesize production and cost functions can be very expensive compared to the statistical cost method (French 1977). Because synthetic firm models cannot be tested in the field except when a firm or individual uses the results to make an investment decision, they must be verified by logic and examining the methodology and assumptions of the model (Stanton 1978).

Forestry Applications.—The economic-engineering approach is the best method for examining economics of forest tract size. It is the only technique which allows comparison of alternative forest management methods for a tract of timber and examination of improved methods of operation. It also makes it possible to hold constant endogenous but influential factors such as topography, species, or volume. Also, the economic-engineering approach can build on a number of previous studies to help analyze productivity of different man-machine production systems and can use previously developed yield and production functions. The method is also the best of the three to account for product variability, and has been used most often in forestry.

FORESTRY LITERATURE

Literature on economics of forest tract size is not plentiful, but some studies have been performed. Many publications discuss problems of tract size in general terms. Only the articles based on specific studies are reviewed here.

Forest Products Firms and Logging Enterprises

In an examination of international pulp and paper prices, Buongiorno and Gilless (1980) found economies of scale only in paper and paperboard production, particularly in noncultural paper production. Several researchers found economies of scale in sawmilling but noted that suboptimal firms are still prevalent (Mead 1966, Dobie 1971, Buford 1974, Granskog 1978). A 1953 study of forest products firms showed that large firms may be more efficient, but that they might have higher overhead costs which the smaller operator can avoid (Weber 1953). Buford (1974) notes that small mills can minimize costs by serving specialized or local markets, employing nonunion labor and not paying fringe benefits, avoiding advertising, buying second-hand equipment, or producing a lower quality product.

Ramonov (1966) and Sutton (1973) wrote that in logging costs, economies of large operations were not very significant in the countries of Russia and New Zealand, respectively. They found that improving the work method and increasing labor productivity offered much more promise for reducing costs than increasing the size of the enterprise. Berndt et al. (1979) used a statistical cost method to find that for the existing range of logging operations in British Columbia, the operations exhibited constant returns to scale. The studies indicate that within a given range, size of the logging entgerprise is not important in determining forest harvesting costs.

Large Forests

Using budget analysis of state forests in England, Sinden (1966) found that large units could reduce budget expenditures. If forest workers were allowed to move freely through a larger amalgamated unit, budget expenses would decrease at least two percent.

An intensive and well-documented English language study on economies of size was performed by Sutton (1968, 1969, 1973) in New Zealand. He studied economies of forest size for management of New Zealand state forests, composed mostly of exotic *Pinus radiatti.* Indirect or overhead costs of general administration, camps and hostels, repairs and maintenance of roads, bridges, and buildings, and fire prevention (including prevention and suppression) decreased significantly with increasing forest size.

Per unit overhead costs for relatively small forests of up to 2,000 acres were about five times those of the largest forest of 292,000 acres (Sutton 1968). Using the soil expectation value to calculate the difference in land values causes by higher overhead costs, Sutton (1969) determined that sums ranging from $30 to $80 per acre could be saved by purchasing land next to large forests (more than 200,000 acres) rather than next to small forests (less than 2,000 acres). He concluded that the primary indirect cost advantages of large forests were lower per acre overhead and administration costs as well as some advantages in fire and pathological control. Spreading of these fixed costs is enhanced by locating or purchasing tracts adjacent to the largest state forests (Sutton 1973).

Large-scale forestry should offer more possibilities for increasing efficiency through rationalization, mechanization, method development, and labor specialization than small-scale forestry. However, Sutton (1973) found no significant direct cost advantages of increased size. He found that large-scale operations did not insure the lowest costs, but that they did seem important in preventing high costs. He concluded that better management, methods studies, and competition reduce direct costs more than increasing the scale of operations.

Diseconomies of excessivley large forests have received little attention, for just cause. A Russian study concluded that management efficiency was best up to an upper limit of 100,000 hectares in Central and Southern Siberia and 500,000 hectares in the North (Sudackov and Vitalev 1967). The Russian findings and the New Zealand study indicate that large-scale diseconomies are not likely to be relevent to forestry in the United States, or other countries composed primarily of small forest land holdings.

Forest Tracts

Diseconomies of small tract size reflected in high average costs are thought to be a primary reason for the presumed underproductivity of nonindustrial private forests, as well as other small forests. The small average acreage, often less than 100 acres, makes the costs of management and harvesting excessively high when compared with larger forest industry and government holdings (Row 1978).

Diseconomies of small tracts place the owners at a competitive disadvantage and prohibit intensive forest management on a commercial basis unless the land is better than average site quality. They also prohibit commercial sales from thinnings and harvest cuts since the volumes offered are generally too low (President's Advisory Panel 1973). Small owners have efficiency-related problems such as illiquid investments and poor cash-flow (Glascock 1978), higher risks of loss to fire, insects, or disease (Row 1973), and more market risk or uncertainty regarding the prices they will receive for their product (United States Department of Agriculture 1978).

Row (1978) enumerates many of the secondary effects of small tract size that may cause diseconomies in timber growing: ". . . owners of small tracts also gain less from the unpriced time and attention they devote to contracts with public service personnel, consultants, loggers, or treatment contractors, to considering offered advice and information, and to doing work or having work done.

Moreover, other factors—incompatibility with the owner's objectives and priorities, shortage of investment funds, lack of information on product values and investment opportunities, experiences with poor logging—may have less influence when owners are considering operations that may bring thousands of dollars instead of hundreds.

In addition to owner's attitudes and perceptions of financial gain, economies of tract size affect the cost of delivering assistance. Difficulties of assembling small tracts may partially determine how readily forest industries may develop economical management units, and thus may change industry location and markets. Administrative costs are higher when wood is bought from many small tracts rather than a few large ones."

Federal income tax provisions allow forest owners to expense a large proportion of their costs immediately and to pay only capital gains tax on the proceeds from growth. While these are essentially scale-neutral, they tend to be taken advantage of preferentially by owners of large tracts (Row 1973).

Sutton (1973) discussed several efficiency advantages of small private forests which might offset their disadvantages. First, their timber could be sold on the free market at any time depending on the price. The owner can avoid financial loss with only minimal risks by holding the timber. Second, and most important, small owners have much more flexible management and are often the first to accept new techniques. Third, small forests have low overhead and administration costs and can often use state roads instead of building their own. Lastly, since small owners have no national or company interests or status to worry them and since they are spending their own rather than someone else's money, they have every direct incentive to reduce costs and sell on the best market. Sutton supports his points with a New Zealand Forest Service study which found that small forest growers had only two-thirds of the growing costs of large private companies.

However, the advantages of small woodland owners enumerated by Sutton are not enough to overcome the many diseconomies of small size. In fact, several studies confirm that small tract diseconomies significantly increase average forestry costs.

Scandinavian Studies

In Norway, Noer (1975) used the economic-engineering approach to evaluate the effect of the size of forest holding on 12 cost and yield factors. Noer's study was conducted using hypothetical parcels 1,000 meters long, consisting of four different widths—yielding 1, 5, 20, and 50 hectare tracts. Model 100,000 hectare forests were composed exclusively of a given tract size.

The study estimated the costs of small acreages compared with the largest acreage for three different harvest levels. Costs on the 50-hectare tract were usually the basis for comparison, so costs reflect comparative costs, not total costs by tract size. The present value of additional forest costs for an infinite time period were calculated to arrive at the figures shown in table 1.

Table 1 indicates that one hectare tracts suffer greatly from increased costs. Even five hectare tracts had costs almost double the 50-hectare parcels. Tracts of 20 hectares suffered comparatively less cost increases with a few notable exceptions. Significant losses still occurred due to needs for longer transport routes, lower prices received due to small volumes of high-grade timber, higher border maintenance costs, and higher stand management costs. In the one hectare class, large relative costs were also incurred for moving machinery and crews, logging along neighboring properties, marketing difficulties, logging along tract edges, cultivating the stand, managing the stand, and planning operations.

Andersson (1965) used a synthetic model of a 36,000 hectare forest on an even-aged 100 year rotation to examine highly mechanized versus conventional forestry methods in Sweden. The analysis included all the costs of management and operation of a forest enterprise for the two alternatives on tracts varying in size from 11.5 to 360 hectares. For annual treatment areas ranging from 45 to 360 hectares (corresponding to a harvest of 1,800 to 14,000 $m.^3$), the variation in average costs was less than 5 percent. When the annual treatment size was below 30 to 40 hectares (1,200 to 1,600 $m.^3$ harvests), costs increased rapidly, especially in highly mechanized operations. Anderson noted that if revenues remained constant and independent of the size of the annual treatment unit, the profit of the enterprise would decrease by as much as operating costs increase.

United States Forest Management

Row (1973, 1974, 1977, 1978) addressed questions regarding economics of tract size. He developed an extensive computer simulation model using the synthetic firm approach to analyze financial returns from southern pine timber growing. As part of his study, the simulator package tested the sensitivity of financial returns to the area of the tract.

In an analysis of Forest Service data, Row (1973) found that fixed costs in forest management were the primary determinants of average costs for forestry operations and that the size of the fixed costs was directly related to the level of mechanization. The effect of planning, administration, and inspection for each tract on average fixed costs was reduced when several tracts were combined into one tract. Average fixed costs increased when separate tracts were added to the

Table 1.—*Capitalized value of annual forestry cost items for different size tracts. (Norwegian Kroners/100 hectares)*[1]

Description of cost factor	Land size class (hectares)			
	1	5	20	50
Spot marking for access roads	15.20	11.20	10.70	10.70
Boundary searching during spot marking and planning	2.70	.50	.10	0
Moving machinery, crew	11.30	1.20	0	0
Plowing snow for access	5.00	4.50	3.50	2.50
Extra costs for hard logging — neighboring property	5.40	1.10	.30	.10
Extended ground transport routes to not cross property	3.70	3.40	2.20	0
Marketing difficulties — insufficient volumes of high-quality timber grades	18.50	14.70	3.70	0
Harvest losses on edges	21.30	3.30	0	0
Increased cultivation costs after planting	11.00	2.20	.60	.30
Border line maintenance	16.20	14.60	13.00	11.70
Stand management	37.50	22.50	18.70	15.00
Operation planning costs	3.10	.60	.10	0
Total value cost of items	160.90	79.80	52.90	40.30
Total additional costs incurred by smaller tracts compared to 50 ha. tract	110.60	39.50	12.60	. . .

[1]From Noer (1967). Production of 0.3m^3 of wood per 100 ha. per year; 1967 prices; annual costs capitalized over infinity at a 4 percent interest rate.

contract, compared to the same acreage composed of one contiguous tract. Average acreage per tract also influenced variable costs slightly. Therefore, tracts should be contiguous if combining tracts to decrease costs is to be successful.

Row's study analyzed southern pine forests under three different managment regimes. He concluded that most economies of size could be obtained in 80 acre tracts. Below that, fewer management regimes had acceptable rates of return. At 20 acres, only intensive management of natural stands yielded positive returns. For 10 acre tracts, no management regimes offered an acceptable investment opportunity. Profitable tract sizes were smaller on more productive sites. Row felt that the fixed costs of treatments were more important than the fixed costs of marking timber sales and removing timber.

Management of natural stands on cutover sites had a substantial advantage over plantations for most small owners, largely because of the large fixed costs of site preparation and planting. Of course, this assumes that natural seeding will occur satisfactorily. Plantations were more competitive on tracts of 40 to 80 acres, especially using genetically improved stock. Row's model determined that small tract sizes also increased the variability of returns and the risks from loss, particularly fire.

Statistical cost research performed by Wikstrom and Alley (1967) on cost control for National Forests found that the size of the area was the most critical variable affecting forest management costs. Management practices examined included slashing, burning, piling, terracing, pruning, and thinning operations. For all practices examined, cost per acre increased rapidly with decreases in size of area, particularly for areas smaller than 40 to 50 acres.

Average cost curves determined by the authors were generally L-shaped. Dozer terracing and tree planting were very costly on tracts less than 15 acres and descended toward their minimum at about 50 to 60 acres. Prescribed burning was exceedingly expensive on tracts smaller than 25 acres and did not approach its minimum average cost until 125 to 150 acres. Wikstrom and Alley concluded that for most forest management practices, cost per acre increased rapidly with decreases in the size of area, particularly on areas smaller than 40 to 50 acres.

Vasievich (1980) also found economies of size in prescribed burning on southern National Forests. He developed L-shaped inverse function cost curves that did not approach their minimum level until about 1,000 acres. Gardner (1981) found that large tracts (50 acres) have lower average reforestation

costs than small tracts (2 to 20 acres). However, investments on nonindustrial private tracts as small as 5 to 10 acres could return an acceptable investment level of 6 percent when subsidy payments were included in the financial analysis. Even without subsidy payments, most reforestation methods provided adequate returns on 10 to 20 acre tracts, assuming no stumpage discounts were applied to the timber crop.

United States Forest Harvesting

Hunter (1980) found decreasing tract size statistically significant in decreasing stumpage prices for pulpwood, supporting the hypothesis of higher harvest costs on small tracts. However, he did not find that to be the case for sawtimber.

Researchers at Virginia Polytechnic Institute and State University (Thienpont 1976, Thienpont et al. 1976) surveyed completed logging operations in the Southeast to determine whether small tract sizes had sufficient volume to amortize both fixed and moving costs for different harvest systems and still provide a profit. They found that mechanized systems required at least 50 acres or 500 cords to harvest an area. Bobtail truck systems dominated the harvesting of small areas or volumes. If bobtail crews ceased operating, small tract supplies would not be economical for present pulpwood harvests. However, volumes on small tracts would then increase and harvests might become economical in the future.

Walbridge (1967) found that for highly capitalized harvest systems, careful attention must be paid to the frequency and length of the move. Move distances in excess of 10 miles into tracts of less than 200 cords total volume were found to be a significant factor in the total cost of harvesting for mechanized (skidder) systems.

Cubbage (1981a), using an economic-engineering approach, found that large tree-length systems, highly mechanized full-tree systems, and whole-tree chipping systems incurred high average harvest costs on small tracts of land. Such tracts generally had average harvest costs as low as or lower than conventional southern pine shortwood harvesting systems, but did not approach their minimum cost level until about 60 to 120 acres, depending on the degree of mechanization and capital investment in the system. As long as cost-competitive stump-to-stump bobtail systems and shortwood prehauler systems are in existence, diseconomies of small tract size should not be a concern. When or where such systems are not present in sufficient number, small tracts would become uneconomic to harvest at equilibrium mill and contract prices.

ALLEVIATING SMALL TRACT PROBLEMS

To overcome economic problems of small forest tract size, various institutional arrangements are commonly proposed. These include technological developments for equipment, cooperation among landowners, tract aggregation, intensive harvests, or similar methods to increase effective tract size or volumes.

Tract Aggregation

Garratt (1957) suggested that is is low volume per se, not low volume per acre, that is the cause for inefficient and expensive forest harvesting and management. This contention is the basis of many programs aimed at pooling resources of landowners in a given market area to increase total volumes and to provide larger and more efficient units for management. Numerous foreign authors (Streyffert, Sweden 1957; Kondo and Morioka, Japan 1965; Kantola, Finland 1967; Noer, Norway 1975; Putkisto, Finland 1976) and United States authors (U.S. Senate 1959, Sizemore et al. 1973, Row 1973, Row 1978, Stoddard 1978) have proposed various methods of cooperation between small private landowners to increase effective tract size to take advantage of large-scale mechanization or other methods to reduce the cost of treatments.

Methods

Purchase of or exchange for adjacent tracts are possible means of consolidating industrial or public forest land holdings. Tracts adjoining existing holdings can be given preferential designations in Forest Service acquisitions in the East or by forest industries throughout the United States. Exchanging isolated tracts for adjacent tracts would enlarge tract sizes, but getting owners to agree on the value of possible land exchanges is difficult.

For most nonindustrial private owners, purchase or exchange to improve timber production is not an option. They need other insititutional arrangements to combine operations and reduce average fixed costs.

Many small and medium sized tracts are leased to forest products firms, who absorb the small acreage in their holdings for all practical purposes and manage the lands as they do their own (Siegel and Guttenberg 1968, Siegel 1973). Forest industries are also beginning to provide landowner assistance programs which may serve to aggregate sales and operations in their area (Taylor and Wilkerson 1977, Forest Farmer 1977, American Pulpwood Association 1977, Southern Forest Products

Association 1979). Consulting foresters and land management firms may manage small woodlands and schedule or pool operations on a number of properties so that they reduce the impact of separate contracting for services (Pleasonton 1968, 1969; Humphries 1979). While the receipts from joint sales are not pooled, owners nevertheless receive higher prices than if the sales had been isolated. State Service Foresters may perform similar services.

Associations of landowners are a method to overcome disadvantages of small tracts and to improve marketing power (Cloud 1969, Sizemore et al. 1973, Stoddard 1978). The associations often seek only to provide treatments at lower costs to members or arrange sales on a joint basis. Most associations and cooperatives have been proposed or established under the sponsorship of public agencies.

Elaborate organizations furnishing members with everything from stand establishment to harvesting, marketing, and manufacturing of lumber and other products required large investments. Even so, they were under-financed, became over-extended, and as a result, folded. McComb (1978) documents several, however, which were successful. These modern co-ops have been more modest in scope. They require little initial investment, usually utilize government cost-sharing assistance, and are most likely to employ only one full or part-time employee, depending instead on members and agencies to contribute time and other assistance.

Kantola (1967, 1974) discusses more elaborate cooperative measures small farms could undertake. Forests could be planted in small scattered fields where agriculture is no longer economically feasible. Stands to be harvested each year could be concentrated around certain roads selected by the forest owners or their associations and yarded to common roads. Work sites could be concentrated by a forest owners association.

Putkisto (1976) describes the extraordinary cooperation achieved among private landowners in Finland. Cooperating owners allow adjacent stands to be treated as single units for planning and harvesting purposes. Competition among companies has even been abandoned so that wood purchases have been rationalized for optimum efficiency and elimination of criss-crossing transportation routes. Wood prices remain high because of increased utilization and annual price negotiations between forest landowner's associations and manufacturers. Obviously, such close cooperation is unlikely in the United States for a long time, if ever. However, some new efforts at cooperation have been made recently.

The tree farm family, a group of private forest landowners associated informally with a forest products company, is an arrangement popular with some companies in the South (Pleasonton 1975). Landowners get help in managing their forest acreage and the company gets preference in buying timber from them. Lands close to mills and company lands can be managed more economically as part of a larger unit.

Forest industry tree planting at cost on nonindustrial private lands is also popular. Government aid, such as credit and loan programs, subsidy payments, and favorable taxation have been proposed or instituted to help make small landowners' production of timber more economic, but it is doubtful that these actually encourage combination of tracts to achieve real economies of size.

Measuring Success

Improved efficiency is the criterion for measuring successful combination of tracts. Efficiency is denoted by increased productivity and lower average costs. Productivity improvements and cost decreases could be measured directly on individual and aggregated tracts or could be measured in economic-engineering studies. They might also be measured by indirect indicators.

Kondo and Morioka (1965) used a circle-to-area ratio method to measure whether combining tracts increased the unity of an area in Japan, which would in turn increase the productivity of mechanized harvests (fig. 2). They found that by combining similar tracts held by different owners, the land unity increased on 40 percent of the tracts in one forested area and 60 percent in another area. The remaining possible combinations did not increase the unity of forest lands or consisted of isolated forest tracts. They also found that the total land area falling within the circle increased from two to nine times the original area, a dramatic increase for improving the productivity of mechanical forest operations. Similar estimates of potential productivity increases could be made in the United States.

Another measure of dispersion of forest lands was developed by Schirm (1968). He proposed a mathematical index to calculate the concentration of forest land as a share of the overall land area. This index, which was also applied by Marszalek (1969), could also be used to calculate the concentration of a particular type of tract or harvesting unit.

Problems

Combining tracts to achieve economies of size is not without drawbacks. Independent forest

landowners generally oppose infringements on their property rights, even for the sake of efficiency and higher profits. Even in countries such as Germany and Switzerland which have progressive forestry programs, owners have shown little interest in forestry cooperatives (Bont 1975, Lammel 1976). The inherent independence of most United States landowners, especially in the South, precludes most formal or legal cooperation. Independent landowners may be reluctant to cooperate because they do not want to give up their flexibility for selling by leasing (Vardaman 1970), do not trust government or government employees (Ormonde 1976), or want to retain their ability to divide tracts into smaller units.

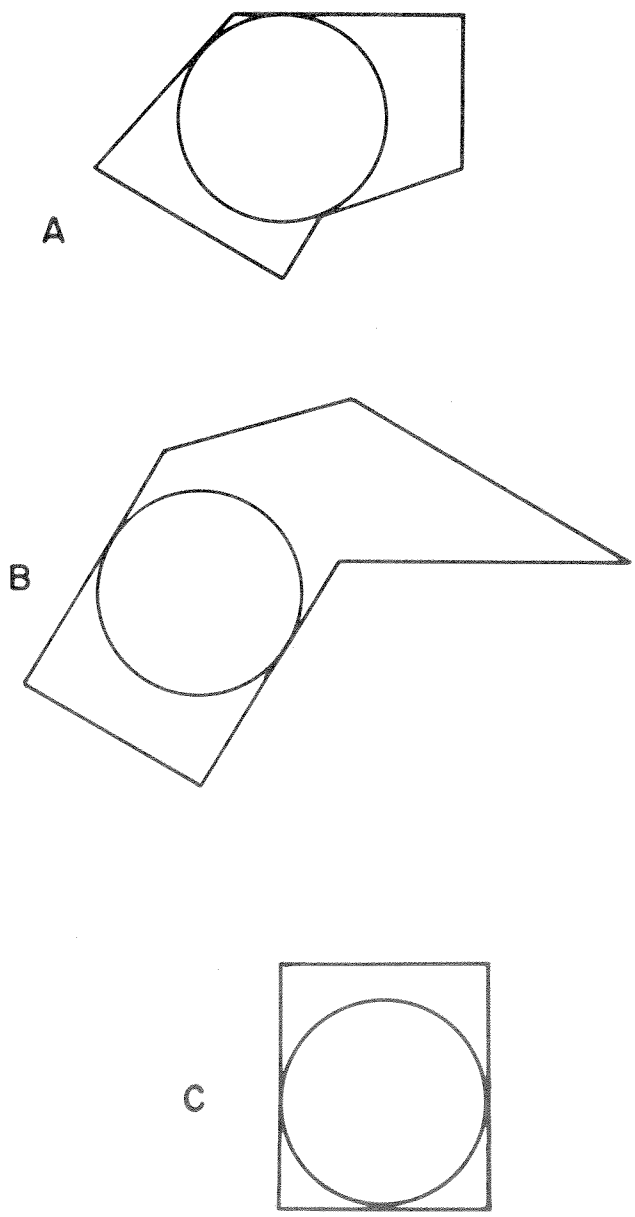

Figure 2.—*The largest circle:land ratio as a measurement of tract unity. C more unified than A; A more than B. Source: Kondo and Morioka 1965.*

Successful programs are likely to employ less binding arrangements such as tree farm families or joint sales with clearly separated costs and returns. Even with rising wood costs, it is questionable that complete integration of small woodlands is the best way to deploy scarce managerial skill and promote good forestry because of the danger of weakening the owner's personal interest (Brandl 1974).

Administrative costs increase with both formal and informal cooperation. Efficiency gains could be negated by excessive proliferation of organizational overhead costs, particularly in extensive management (Row 1974, Putkisto 1976).

Intensive Harvests

Another proposal to increase economies of size is to increase the amount of even-aged or strip cutting to increase the volumes removed (Holekamp 1965, Jarck 1966, Walbridge and Camisa 1966, Sundberg 1966, Silversides 1972, Ormrod 1974). The proposal has merit for industrial and perhaps some public lands, but runs aground on the landowning objectives of continuous tree cover, scenic forests, and wildlife promotion held by many nonindustrial private forest owners. Therefore, its application will be limited by the owner's objectives.

Small-Scale Equipment

A scaling down of present machinery or development of small-scale technology has been suggested to overcome problems of high management and harvesting costs for mechanized systems operating on small tracts (Raup 1978b, Gunter 1979). Various modifications of farm tractors and small trucks have been suggested (Hobson 1959, Harmon 1970, Ormrod 1974, Ormonde 1976). Other possibilities are scaled-down versions of fully mechanized systems—smaller feller-bunchers, rubber-tired skidders, and chipping machines. Ideally, the equipment should be designed to fit the silviculture employed, minimize fixed and operating costs, and maintain high levels of mechanized productivity (Gunter 1979).

Again, the concept has drawbacks. Small-scale equipment is not as productive, even proportionately, as large equipment. At present, mechanized small-scale systems have not proven to be an economical alternative to large-scale equipment (Cubbage 1981b). As suggested by Pratten (1971), small equipment's lower productivity to cost ratio makes small systems have high average costs, even on small tracts.

SUMMARY

Neoclassical economic literature and empirical studies provide the theoretical foundation for analyzing economics of size. Economics of size studies are based on examination of the long-run average cost curve or envelope curve of a firm which has the possibility of using different technology and factor combinations to produce a given output at a point in time. The minimum point on the long-run average cost curve is usually referred to as the minimum efficient size or the optimum size. Better utilization of technology and mechanization, specialization of workers and equipment, reduction of resource indivisibilities, and other factors create economies of large size. Managerial limitations and diminishing returns to factors of production may cause diseconomies of size in excessively large firms.

Empirical industrial and agricultural studies of firms have used three approaches for measuring economies of size. The survivorship method determines optimal sizes by inspecting trends in the size of surviving firms. The statistical cost method attempts to statistically estimate the long-run average cost curve of the firm based on data from accounting records of existing firms. The economic-engineering approach estimates production functions for the component production processes and applies the factor prices to the production functions to determine the long-run average cost curve and optimum firm size.

Studies of economics of size in forestry indicate that the causes of economies of size are different from those found in most industrial or manufacturing enterprises. In forestry, most economies of size are achieved by spreading the initial fixed costs for capitalization and transport of machinery over a larger output. Extensive specialization of workers offers little advantage in forestry because few operations are big enough to take advantage of these economies. Better utilization of technology and mechanization does provide some economies of size on large forest tracts.

Forestry literature documents that small tracts have higher forest management and harvesting costs than large tracts. Tracts less than 50 to 75 acres in size have significantly greater average costs, especially for mechanized operations. Average costs seem to be at least 25 percent higher for 30 to 40 acre tracts and 50 percent higher for tracts below 10 to 20 acres in size. Overall, larger tracts (50 to 125 acres) have large economic advantages over small tracts (less than 50 acres). Average costs increase rapidly on tracts below 50 acres and are prohibitive on tracts below 10 to 20 acres in size.

Increasing mechanization and decreasing availability of manual labor will exacerbate problems with economics of size. Encouraging labor-intensive forestry, developing small-scale technology, harvesting larger volumes, and promoting tract aggregation have been suggested to alleviate problems of high average costs on small tracts. Of these, landowner cooperation and tract aggregation efforts are the most promising, provided the efficiency gains are not offset by increased administrative costs.

LITERATURE CITED

American Pulpwood Association. 1977. Industry's landowner assistance programs in the Southeast. Tech. Pap. 77-P-2. 3 p.

Andersson, Stig. 1965. Forslag till teoretiska modeller for studium av behandlings enheternas storlek, form och lage (Theoretical models for the study of size, form, and location of treatment area units, summary only). Stencil, Inst. F. Skogsteknik. Skogshogholan, Stockholm.

Bain, Joe S. 1969. Survival-ability as a test of efficiency. Am. Econ. Rev. 59(2):99-104.

Berndt, Ernst R., Alan J. Cox, and Peter H. Pearse. 1979. Estimation of logging costs and timber supply curves from forest inventory data. For. Chron. 55(4):144-147.

Bont, A. 1975. Consolidation of private forest holdings (summary only). Wald und Holz 57(1):7-10.

Brandl, H. 1974. Co-operation of forest enterprises: aspects of forest policy and economics (summary only). Allgemeine Forstund Jagdzeitung 145(12):226-231.

Buford, James. 1974. Some aspects of competition in the southern pine lumber industry of Alabama, 1967-1972. Ph.D. diss. Univ. Ga. Athens. 197 p.

Buongiorno, Joseph and James K. Gilless. 1980. Effects of input costs, economies of scale, and technological change on international pulp and paper prices. For. Sci. 26(2):261-275.

Chamberlin, Edward H. 1948. Proportionality, divisibility, and economies of scale. Quart. J. Econ. 62(2):229-262.

Cloud, Mason C. 1969. Promotion of forest landowner aggregates. J. For. 67(12):868-869.

Cubbage, Frederick W. 1981a. Economies of forest tract size in southern pine harvesting. Ph.D. Diss. Univ. Minn. St. Paul. 251 p. + appen.

Cubbage, Fred. 1981b. Are small-scale harvest systems cost competitive? ASAE Pap. No. 81-

1588. Presented Winter Mtg. Am. Soc. Agric. Eng. Chicago. 15 p.

Dobie, James. 1971. Economies of scale in sawmilling in British Columbia. Ph.D. Diss. Oregon State Univ. Corvallis. 124 p.

Doll, John P. and Frank Orazem. 1978. Production economics: Theory with applications. Grid, Inc. Columbus, Ohio. 406 p.

Forest Farmer. 1977. Guide to forestry assistance available to southern timberland owners. 36(5):30-31. Manual Edition.

French, Ben C. 1977. The analysis of productive efficiency in agricultural marketing: models, methods, and progress. In: A Survey of Agricultural Economics Literature, Volume 1. Univ. Minn. Press. Minneapolis. p. 93-206.

Gardner, William E. 1981. Effect of tract size on cost of reforestation. M.S. Thesis. N.C. State Univ. Raleigh. 44 p.

Garratt, George A. 1957. Small woodlands and utilization. Am. For. 63(11):29, 30, 53-55.

Giaver, Harald and James Seagraves. 1960. Linear programming and economies of size. J. Farm Econ. 42(1):103-117.

Glascock, H.R., Jr. 1978. Greater outputs from NIPFs: what programs are cost-effective? J. For. 76(5):268, 299, 310-312.

Gorecki, Paul K. 1977. Economies of scale and efficient plant size in Canadian manufacturing industries. Res. Monogr. No. 1. Res. Branch, Bur. Competition Policy, Can. Dept. Consumer Corp. Affairs. 111 p.

Granskog, James E. 1978. Economies of scale and trends in the size of southern forest industries. In: Proc. Symp. Complete Tree Utilization South. Pine. New Orleans, La. p. 81-87.

Gregersen, Hans M. and Contreras, Arnoldo. 1979. Economic Analysis of Forestry Projects. FAO For. Pap. 17. U.N. Food Agric. Organ. Rome.

Gunter, John E. 1979. "Intermediate technology" key to small woodlands productivity. For. Ind. 106(5):64-66, 70.

Hall, Bruce F. and E. Phillip LeVeen. 1978. Farm size and economic efficiency: the case of California. Am. J. Agric. Econ. 60(4):589-600.

Harmon, Grady R. 1970. Mechanization for the small timberland owner. For. Farmer 30(1):8, 9, 18.

Heady, Earl O. 1952. Economics of agricultural production and resource use. Prentice-Hall, Inc. Englewood Cliffs, N.J. 850 p.

Hobson, John C. 1959. Making mechanized harvest of farm woodlands lucrative. Notheast. Logger 7(12):22-23, 36-38.

Holekamp, James A. 1965. New age of the logger. For. Farmer 25(1):9-10, 43-44.

Humphries, William C., Jr. 1979. Role of consultants noted (letter to the editor). For. Ind. 106(10):21.

Hunter, Thomas Parkin Croom. 1980. The geographic variation of southern pine timber prices. Ph.D. Diss. N.C. State Univ. Raleigh. 100 p.

Jarck, Walter. 1966. Mechanization and the small forest owner. For. Farmer 25(7):127-129.

Kantola, Mikka. 1967. Role of forestry in small farms. Unasylva. 21(2):9-16.

Kantola, Mikka. 1974. Forest ownership structure and its affect on the choice and design of harvesting methods and harvesting organization in the Scandanavian countries. In: Proc. IUFRO Div. 3, For. Harvesting Mech. Autom. Ottawa, Ontario. p. 85-103.

Kondo, Masami and Noboru Morioka. 1965. Studies on the size of the private forest lands with reference to mechanization. J. Jap. For. Soc. 47(5):193-198.

Lammel, Richard. 1976. The structure of farming enterprises which include forests and the attitudes and aims of owners of farm forests (summary only). Inst. f. Forstpolitik und Forstliche Betriebwirtschaftslehre der Forstlichen Forschunganstalt Munchen, Amalienstr. 52, D-8000 Munchen. No. 27. 244 p.

Leibenenstein, Harvey. 1966. Allocative efficiency vs. "X-efficiency." Am. Econ. Rev. 56(3):392-415.

Levin, Richard C. 1977. Technical change and optimal scale: some evidence and implications. So. Econ. J. 44(2):208-221.

Lund, P.J. and P.G. Hill. 1979. Farm size, efficiency, and economies of scale. J. Agric. Econ. 30(2):145-158.

Madden, J. Patrick. 1967. Economies of size in farming — theory, analytical procedures, and a review of selected studies. Agric. Econ. Rep. No. 107. U.S. Dep. Agric. Econ. Res. Serv. 83 p.

Madden, J. Patrick and Earl Partenheimer. 1972. Evidence of economies and diseconomies of farm size. In: Size, Structure, and Future of Farms. Iowa State Univ. Press. Ames. p. 78-90.

Marszalek, Tadeusz. 1969. Calculation of the index of forest area concentration. Sylwan 113(4):35-41.

McComb, William H. 1978. Forest cooperatives — how successful. For. Farmer 37(8):9, 14-18.

Mead, Walter, J. 1966. Competition and oligopsony in the douglas fir lumber industry. Univ. Calif. Press. Los Angeles. 276 p.

Miller, Edward M. 1977. Selection bias in the estimation of cost and production functions. J. Econ. Bus. 30(1):79-81.

Noer, Havla. 1975. An evaluation of economic disadvantages associated with fragmentation of

forest holdings. Tidsskrift for Skogbruk. 83(2):233-248.
Olson, Russell O. 1956. Review and appraisal of methods used in studying farm size. In: Resource Productivity, Returns to Scale, and Farm Size. Iowa State Coll. Press. Ames. p. 53-60.
Ormonde, Nick. 1976. An independent woodland owner speaks his mind. Am. For. 82(9):26-29.
Ormrod, Peter C. 1974. Harvesting problems in small woodlands. Timber Grower. No. 51. p. 19-24.
Pleasonton, Alfred. 1968. Southern consulting firms, 1966. The Consultant 13(2):14-19.
Pleasonton, Alfred. 1969. Southern forestry consultants and their views. J. For. 67(9):658-660, 664, 666, 668-672.
Pleasonton, Alfred, 1975. Tree farm families in the South. Res. Pap. SO-113. U.S. Dep. Agric. For. Serv. South. For. Exp. Stn. New Orleans, La. 9 p.
Pratten, C.F. 1971. Economies of scale in manufacturing industry. Occas. Pap. 28. Univ. Cambridge, Dept. Appl. Econ. Cambridge Univ. Press. London. 352 p.
Pratten, C.F. and R.M. Dean. 1965. The economies of large-scale production in British industry — An introductory study. Occas. Pap. 2. Univ. Cambridge, Dept. Appl. Econ. Cambridge Univ. Press. London. 105 p.
President's Advisory Panel on Timber and the Environment. 1973. Report of the President's Advisory Panel on Timber and the Environment. U.S. Gov. Print. Off. 541 p.
Putkisto, K. 1976. Forestry and mechanization in Finland. Pulp Pap. Can. 77(4):70-82.
Raup, Philip M. 1978a. Some questions of value and scale in American agriculture. Am. J. Agric. Econ. 60(2):303-308.
Raup, Philip M. 1978b. Reflections on the public interest in private nonindustrial forest lands. In: Background Papers from Workshop on Policy Alternatives for Nonindustrial Private Forests. Discussion Pap. D-22. Resour. Future. p. 110-126.
Romanov, E.S. 1966. Size of enterprise and costs of production (summary only). Lesn. Z. Arhangel'sk. 9(3):156-161.
Row, Clark. 1973. Probabilities of financial returns from southern pine timber growing. Ph.D. Diss. Tulane Univ. New Orleans. 428 p.
Row, Clark. 1974. Effect of tract size on financial returns in forestry. In: Proc. IUFRO Div. 3, For. Harvesting Mech. Autom. Ottawa, Ontario. p. 105-134.
Row, Clark. 1977. Size of forest tract influences costs and financial returns. In: Proc. 1976 S.A.F. Natl. Conv. Soc. Am. For. Washington, D.C. p. 55-61.
Row, Clark. 1978. Economies of tract size in timber growing. J. For. 76(9):576-582.
Saving, T.R. 1961. Estimation of optimum size by plant survivor technique. Quart. J. Econ. 75(4):569-607.
Scherer, F. 1970. Industrial market structure and economic performance. Rand McNally. Chicago. 576 p.
Scherer, F. 1973. The determinants of industrial plant sizes in six nations. Rev. Econ. Stat. 55(2):135-145.
Schirm, Wolfgang. 1968. Method for determining forest-area concentration. Archiv. f. Forstwesen 17(2):217-229.
Seckler, David and Robert A. Young. 1978. Economic and policy implications of the 160-acre limitation in federal reclamation law. Am J. Agric. Econ. 60(4):577-588.
Shephard, William G. 1967. What does the survivor technique show about economies of scale? So. Econ. J. 34(1):113-122.
Siegel, William C. 1973. Long-term contracts for forest land and timber in the South. Res. Pap. SO-87. U.S. Dep. Agric. For. Serv. South. For. Exp. Stn. New Orleans, La. 14 p.
Siegel, William C. and Sam Guttenberg. 1968. Timber leases and long-term cutting contracts in the South. For. Ind. 95(4):62-64.
Silversides, C.R. 1972. The mechanization of timber harvesting. In: Mechanization, Safety, and Manpower in Southern Forestry. 21st Annual Forestry Symposium, Louisiana State University. La. State Univ. Press. Baton Rouge. p. 33-46.
Sinden, John A. 1966. The optimum forest size in a budget framework. Commonw. For. Rev. 45(4): 338-345.
Sizemore, William R. and Sizemore and Sizemore Staff. 1973. Improving the productivity of nonindustrial private woodlands. In: Report of the President's Advisory Panel on Timber and the Environment. U.S. Gov. Print. Off. Washington, D.C. p. 234-295.
Southern Forest Products Association. 1979. Forest landowner assistance guide for the South. New Orleans, La. 30 p.
Stanton, B.F. 1978. Perspective on farm size. Am. J. Agric. Econ. 60(5):727-737.
Stigler, George J. 1958. The economics of scale. J. Law Econ. 1(1):54-71.
Stoddard, Charles H. 1978. Proposed management and marketing foundation for improving production on small forests. J. For. 76(3):158-159.
Streyffert, T. 1957. The influence of ownership and size structure on forest management in Sweden (summary only). Kungl. Skogshogsholans Skrifter. No 236.
Sudackov, E.J. and A.P. Vitalev. 1967. The optimum size of leskhozes in Siberia (summary only). Lesn. Hoz. 1967(7):56-58.
Sundberg, Ulf. 1966. The relationship between the

mechanization and the size of the logging forest enterprise and the forest working plan. In: Proc. 6th World For. Conf. 6 CFM/G/C.T.IV/7. Madrid. p. 2818-2824.

Sundquist, W. Burt. 1972. Scale economies and management requirements. In: Size, Structure, and Future of Farms. Iowa State Univ. Press. p. 78-90.

Sutton, W.R.J. 1968. Forest size and overhead costs. New Zealand For. Res. Inst. Rep. — Roturua. p. 41.

Sutton, W.R.J. 1969. Overhead costs in relation to forest size. New Zealand J. for. 14(1):87-89.

Sutton, W.R.J. 1973. The importance of size and scale in forestry and forest industries. New Zealand J. For. 18(1):63-80.

Taylor, Frank E. and Connie G. Wilkerson. 1977. Profile of participants in landowner assistance program, southeastern Mississippi. J. For. 75(12):778-779.

Thienpont, Russell F. 1976. Tract size and timber harvesting relationships in the Southeast. M.S.Thesis. Va. Polytech. Inst. State Univ. Blacksburg. 56 p.

Thienpont, Russell F., T.A. Walbridge, and W.B. Stuart. 1976. Harvesting systems and tract size in the southeastern U.S. forest. ASAE Pap. No. 76-1561. Presented Winter Meeting Am. Soc. Agric. Eng. Chicago. 22 p.

U.S. Department of Agriculture. 1978. The federal role in the conservation and management of private nonindustrial forest lands. Interagency Committee Report. 63 p. + appen.

United States Senate. 1959. The small independent firm's role in the forest products industry. Senate Rep. No. 240. 86th Cong. 1st Sess. U.S. Gov. Print. Off. Washington, D.C.

Vardaman, James M. 1970. The smartest fellow around. Am. For. 76(11):8, 61-63.

Vasievich, J. Michael. 1980. Costs of hazard-reduction burning on southern National Forests. South. J. Appl. For. 4(1):12-15.

Viner, Jacob. 1952. Cost curves and supply curves. In: Readings in Price Theory. Richard D. Irwin, Inc. Homewood, Ill. p. 198-232.

Walbridge, Thomas A. 1967. Ownership pattern restraints on harvesting. ASAE Pap. No. 67-625. Presented Winter Mtg. Am. Soc. Agric. Eng. Detroit. 17 p.

Walbridge, Thomas A. and Louis H. Camisa. 1966. Mechanization in southern woodlands — where are we headed? For. Farmer 25(7):9-12. Manual Edition.

Walters, A.A. 1963. Production and cost functions: an econometric survey. Econometrica. 31(1, 2):1-66.

Weber, P.J. 1953. Investment decisions of forest products firms. In: Research in the Economics of Forestry. Charles Lathrop Pack, For. Found. Washington, D.C. p. 312-324.

Wikstrom, J.H. and J.R. Alley. 1967. Cost control in timber growing on the National Forests of the Northern Region. Res. Pap. INT-42. U.S. Dep. Agric. For. Serv. Intermtn. For. Range Exp. Stn. Ogden, Utah. 37 p.

Wills, J.E. 1956. Research in the size of farm from business records and surveys. In: Resource Productivity, Returns to Scale, and Farm Size. Iowa State Coll. Press. Ames. p. 37-50.

CUBBAGE, FRED.

1983. Economics of forest tract size: Theory and literature, U.S. Dept. Agric. For. Serv. Gen. Tech. Rpt. SO-41, 21 p. South. For. Exp. Stn., New Orleans, La.

This report reviews worldwide literature and theoretical bases on economics of forest tract size and examines means of reducing the diseconomies of small size. Economics of size will become more important as forestry becomes more mechanized.

☆U.S. GOVERNMENT PRINTING OFFICE: 1983-669-085/18