Effect of Product Form, Compaction, Vibration and Comminution on Energywood Bulk Density

Timothy P. McDonald **Bryce J. Stokes**
Research Engineer Project Leader
USDA Forest Service
Southern Forest Experiment Station
Auburn, Alabama 36849, USA
and
Joseph F. McNeel
Research Engineer
USDA Forest Service
Pacific Northwest Experiment Station
Seattle, Washington 98105, USA

ABSTRACT

A study was performed to examine the changes in density of stacked roundwood, chips, and chunks as affected by various compaction treatments. Density of stacked roundwood bolts was tested for the effect of stacking orientation, binding of the stack ends, and species. Stacked bolt wood occupied less than 50 percent of the total rack space for all species, giving final dry bulk densities, based on total rack volume, of 159 to 293 kg/m^3. Alternating butt ends in the rack increased final bulk densities by an average of approximately 40 percent. The effect was greatest for mixed, small hardwood stems. Vibration and compaction of chipped material (pine, mixed hardwood, and sycamore) resulted in final dry bulk densities of from 170 to 273 kg/m^3. Vibration increased dry bulk density by an average of 20 percent, whereas compaction increased dry bulk density by about 30 percent, vibration of sycamore chunks produced a 17 percent increase.

INTRODUCTION

In a high-volume/low-unit-value operation such as energywood production, optimization of the transport system, as well as harvesting, is crucial for its economic success. Decisions must be made concerning the product form to transport, and the mode of transport. The interaction between the transport system and operations must be considered. These factors are further complicated by customer requirements, such as seasonal fluctuations in demand, fuel storage capacity, and restrictions on moisture content of boiler feedstock.

Biomass material suitable for energy production is highly heterogeneous in origin and form, making decisions regarding transport methods difficult to implement. In particular,

optimizing transport of energywood generally requires carrying the greatest possible amount of material per load within legal restrictions. Many factors influence which form is best to use in transporting biomass material. This study, partially supported by IEA/BA Task IX, Activity 6, was performed to examine energywood transport alternatives and the relative advantages of each. Specific objectives of the study were to: (1) review and summarize literature concerned with transportation methods and economics, and improvements in hauling efficiency, and (2) identify and evaluate methods of increasing the mass per unit volume (density) of materials transported for use as fuel through comminution, densification, or drying.

LITERATURE REVIEW

Trucking is the most common method of transporting forest products, including energywood. State trucking regulations in the Southern U.S. limit gross vehicle weight to approximately 36 tonnes. Trailer-size limits vary from State to State, but assuming a 12.2 by 2.6 by 2.7 m trailer with a maximum allowable payload of 24.5 tonnes (40' by 102" by 9', 27 tons), the material being hauled would need a green bulk density of about 286 kg/m^3 (17.6 lb/ft^3) to make maximum legal gross vehicle weight and transport function most efficiently. Tree-length stacked pulp roundwood generally meets this criterion (see Table 1), having a green bulk density of 500 kg/m^3, assuring 50 percent moisture content (MC), (Danielsson 1983), although log taper and tree species can cause significant variation from this value (Larsson and Carlsson 1982). Utilization of logging residuals for energy has received much attention in the literature (Curtin and others 1980; Danielsson 1983; Hartsough and Nakamura 1990; Miller and others 1987; Puttock 1987; Stuart and others 1981). However, smaller trees and residues, although important potential sources of energy biomass that account for up to 50 percent of standing biomass (Watson and others 1987), are inefficient to transport in untreated form because of their lower bulk density. Some form of densification of these materials is therefore required to minimize the cost of supplying biomass for fuel.

Chipping is by far the most common method for processing unmerchantable trees. Chippers are expensive and difficult to maintain, and they require extra van capacity for continuous operation (Schiess and Yonaka 1982). On the positive side, they can be used to produce energy or pulp chips, allowing maximum utilization of standing biomass.

Table 1. Biomass densities.

Product	MC (%)	Dry Density (kg/m^3)	Reference
Roundwood	50	250-275	Danielsson 1983
Tree section	50	100-120	Danielsson 1983
Small trees (pct)	50	87-100	Danielsson and others 1977
Logging slash	56	97	Carlsson 1981
Chips			
green pine	47	140	Hassan 1976
hardwood	50	192	Haygreen 1981
yellow pine (bark)	50	120	Haygreen 1981

Bulk density of green chips varies with species. Hassan (1976) reported a density of 265 kg/m^3 for green pine chips. Guimier (1985) listed bulk densities of green loblolly pine chips at 245 kg/m^3 and whole-tree hardwood chips (yellow poplar and oak) at 384 kg/m^3. The bulk density of green pine chips is generally below the minimum for full legal payload. Because of this, chip compression has been proposed as a means of both densifying the load and, given enough compression, decreasing the moisture content. Hassan (1976) reported that a pressure of 0.3 MPa (40 psi) was sufficient to compress green pine chips (47-percent MC, wet basis) to half their original volume. This resulted in a final green bulk density of 530 kg/m^3, with pressure maintained. Haygreen (1981) found in laboratory tests on loblolly pine, yellow poplar, and oak that moisture content could be reduced through compression to about 35 percent wet basis, resulting in ratios of increased heat value to input energy of from 67 to 240. This required pressures, however, of about 100 MPa (15,000 psi). He concluded that a 50-percent reduction in both solid volume and moisture content were possible with compression, although no indication of final bulk density of the material was given.

Slash is another significant energy-rich logging residual that is difficult to utilize because of its low bulk density. A number of methods have been proposed to both collect and densify this material. Slash piled in a central location can be hogged for fuel, and several studies have examined the performance and economics of tub grinders for this purpose. Hog grinders are advantageous for densification of slash because they are not as susceptible to damage from foreign material (Johnson 1985). Forrester (1993) summarizes features and costs of several commercially available grinders suitable for slash.

Arthur and others (1982) reported final dry bulk densities of from 146 to 231 kg/m^3 for slash hogged using a 300 kW grinder. Productivity of the grinder was related to the size of the screen holes in the tub, with a 76-mm-diameter hole having productivity about 5 times that of a 19-mm hole. Input energy was less than one-fourth for the larger screen-hole size. Final bulk density increased with decreasing hole size, with the density for the 19-mm hole about 17 percent greater than for the 76-mm hole. Moisture content of the material affected most performance parameters. Dry slash (11-percent MC, wet basis) required comparable amounts of input energy to grind, but productivity was reduced by about 15 percent compared to the green material for the 76-mm screen-hole size. For the smaller screen sizes, productivity was marginally higher for the dry material. Final bulk density averaged 24 percent higher for the dry slash.

Chipped and hogged biomass materials tend to contain a large proportion of fine material, which can limit airflow through storage piles. This results in biological heating, which degrades the heat value of the chips, hastens dry-matter loss, and can even cause spontaneous combustion. Fractioning into coarser pieces, or chunkwood, can reduce these problems. Mattson and Karsky (1985) reported on the development of a chunking system. Tests run using several hardwood and softwood species at approximately 50-percent MC (wet basis) resulted in final

bulk densities that averaged 350 kg/m^3. Danielsson (1990) reported the physical and combustion characteristics of chunkwood. It was concluded that chunkwood required less energy to produce than chips, had lower air resistance, slightly lower dry-matter losses over time, and twice the complete burnout time. Studies indicated that, properly sized, chunkwood could be burned in many types of conventional boilers. In addition, combustion tests indicated lower ash content and lower temperatures in flue gases when burning chunkwood versus chips. Some disadvantages in materials handling were noted mainly in the likelihood of bridging.

An alternative method of reducing the potential loss from biological heating is to postpone comminution of the material until near the time of combustion. Implementing this approach requires the development of a residue compaction system to increase transport efficiency.

Guimier (1985) presents an excellent comprehensive review of biomass compaction technologies, mainly North American and Scandinavian. His review identified four classes of equipment currently available for compaction: (1) balers, (2) compaction into containers, (3) truck-mounted compactors, and (4) bundling. Parts of his review are summarized here.

Danielsson and others (1977) investigated the compaction of green and dry pine slash. Materials were compacted in a box using a hydraulic ram that produced pressures exceeding 1000 kPa (150 psi). Curves of the change in volume, normalized to initial volume (volume reduction ratio or VRR) as a function of ram pressure, were developed. The curves indicated that a 50-percent decrease in green slash volume was possible with relatively low compressive force, but further compaction required exponential increases in pressure. VRR curves for dry slash showed an exponential increase in pressure above approximately 75 percent. The pressure necessary to achieve 50-percent reduction in VRR was significantly lower for dry slash, 200 kPa vs 10 kPa (32 psi vs 1.5 psi). Final bulk densities after 50-percent reduction in VRR were 412 kg/m^3 for green material (54-percent MC, wet basis) and 272 kg/m^3 for dry slash (20-percent MC, wet basis).

Baling is a common practice in many industries and several machines are available for this purpose. Early tests using a slightly modified agricultural forage round baler (Fridley and Burkhardt 1981) showed that it was possible to use standard equipment for biomass compaction, although the torque necessary to bend and break the residues into a round bale was about twice that normally encountered when baling hay. Significant problems were also encountered when starting new bales. The baler was capable of conforming material up to 10 mm in diameter into the bales. Green bulk density of bales made in this fashion ranged from 142 to 338 kg/m^3 with higher values for pine than hardwood species. Roll crushing and splitting of biomass prior to baling to reduce moisture content and increase the maximum conformable size of material was investigated by Barnett and others (1986). They determined the energy requirements for crushing the small stems typical of those found on utility right-of-ways and found that it was feasible to crush stems up to about 13 cm in diameter to achieve adequate moisture loss. Later work by

Sirois and others (1991) indicated that the drop in moisture content of the crushed material was highly influenced by weather conditions.

Square balers have also been developed and applied in compacting biomass. Guimier (1985) reported on a study that used scrap metal and paper balers to compact orchard prunings. Results indicated that material up to 10 cm in diameter could be formed into bales that retained their shape after ejection, although some expansion was noted over time. Bales in excess of 400 kg/m^3 were made.

A prototype square baler designed specifically for biomass was developed at Virginia Polytechnic Institute (Walbridge and Stuart 1979). In tests both at VPI and in the Pacific Northwest (Schiess and Yonaka 1982), the machine was found capable of forming 1 m^3 bales with green bulk densities ranging from 522 to 658 kg/m^3.

Jenkins (1983) reported on another agricultural machine adapted for biomass compaction, the cotton moduler. The moduler was equipped with heavier gauge steel sides and larger hydraulic cylinders to boost compaction pressure to 143 kPa (21 psi). The system was tested on prunings from almond trees and produced modules with bulk density averaging 102 kg/m^3. In tests using green logging residue, Miles (1981) reported the moduler could compact bales to about 190 kg/m^3 wet basis. Miles and Miller (1982), however, found that tub grinding of chaparral residues prior to compaction in the modular resulted in final bulk densities of over 400 kg/m^3.

Truck-mounted compactors have been developed mainly in Scandinavia. As reported in Guimier (1985), results of tests indicated that an increase in bulk density of green logging slash of about 30 percent could be achieved by using devices that vertically load trailers of uncompacted material. Larsson and Carlsson (1982) provide an economic summary of several Scandinavian tests using truck- or trailer-mounted compactors.

The single most important factor influencing the transport costs of wood residues is length of haul (Adler 1985). Costs are generally assumed to be linearly proportional to haul distance (Puttock 1987, Hartsough 1990). Adler (1985), however, reported that costs-per-unit distance decrease with increasing distance up to about 160 km, after which they level off. The decrease likely reflects more efficient utilization of equipment.

Curtin and others (1980) determined hauling cost estimates for fuelwood as part of an overall harvest system. Transport was the most highly variable component of the overall supply cost. Puttock (1987) found that fuel chips were competitive economically, on a cost-per-unit-energy basis with natural gas when hauled less than 80 km and competitive with fuel oil for haul distances less than 200 km. Ames (1980) studied the costs of various phases of wood energy utilization and reported an average haul distance of wood residues of 92 km for the State of Georgia. Eza and others (1984) reported methods for determining the maximum distance that

energy wood could be hauled economically. They found that for conditions at the time, haul distances of about 80 km were feasible.

Most wood products in the Southeast are hauled by truck (74 percent in 1991) (Howell 1993), so most research has focused on truck transport of energy biomass. Types and configurations of trucks used in North America to haul biomass have been summarized (FERIC 1990). Shipment by rail and barge, although infeasible in most locations in the U.S., has been considered in some research. Adler (1985) reported that rail tariff rates were about 35 percent lower than truck rates for haul lengths of about 130 km. Rail rates tend to decrease with increasing haul distance (Hyde and Corder 1971). Howell (1993) reported delivered prices of pulpwood were about 13 percent lower for products shipped by rail. Hyde and Corder (1971) also reported rates for barge haulage.

There are several problems associated with high moisture content in woody material used for fuel including: (1) reduced fuel value, (2) degradation, (3) freezing, (4) higher handling and transportation costs on a dry-unit basis, and (5) pricing and trade values. If wood chips are to become a substantial source of energy for residential, institutional, and commercial users, these problems have to be resolved. The benefits of drying woody biomass fuels are evident, but the economics require careful assessment and continued development of alternative methods. The extent and techniques of drying are myriad; they range from simple, transpirational drying to elaborate, high-temperature precombustion drying. While natural drying occurs, it can be enhanced at one or several points along the supply chain. Some of the wood-drying options are reviewed in Stokes and others (in press) with an emphasis on transpirational drying of whole trees and air-drying of chips.

METHODS

This study was designed to determine haul densities for some common energywood products and to evaluate various methods of increasing densities. Treatments included compression of boltwood and vibration and compression of chips, chunks, and slash. The effect of species and the stacking arrangement of bolt wood were also investigated. Species differences and dryness of material were examined as covariates in the vibration and compaction tests.

Materials

Species used in the study included sycamore (*Platanus occidentalis* L.), mixed southern pines (*Pinus* spp.), and mixed southern hardwoods (*Carya* spp., *Liquidambar styraciflura* L., *Quercus rubra* L., *Q. alba* L.). Sycamore bolts were obtained from a short rotation plantation in south Alabama. The pine and mixed hardwood stems were selectively hand felled from stands near Auburn, Alabama. Sycamore bolts were 4.3 m in length and 6.6 cm in diameter at the midpoint of the stem. The pine and mixed hardwood stems were 6.1 m long. Average bolt diameters were 7.0 cm for the pine, and 7.2 cm for the hardwood, both measured 1.5 m from the butt end.

Average bolt volumes were 0.21 m^3, 0.44 m^3, and 0.44 m^3 for the sycamore, pine, and hardwood bolts, respectively. All stems were stacked outdoors and allowed to dry transpirationally. The sycamore bolts were weighed individually once a week for a period of more than 4 months to track their drying rate.

Whole-tree, mixed (screened) hardwood, and pine chips were procured from local harvesting operations and mills. In addition, some screened pine chips were used in the study (see table 2). Several of the sycamore bolts were cut with a chainsaw into chunks 2.4 to 7.6 cm long. Limbs and tops of freshly cut pine trees were cut into short lengths of approximately 10 cm for the slash test. Since there was an assortment of types of chips, the test materials were evaluated for chip-diameter distributions (see table 3). Moisture contents for the materials are shown in table 2. Drying tests were also conducted on the sycamore, mill-run mixed hardwood, and pine chips. The chips were piled outdoors and allowed to dry for 4 months. Two sycamore chip piles were placed on woven geotextile mats to shed water; the piles were also weighed once a week to track their drying rate.

Table 2. Moisture content of materials used in tests.

Material	Moisture content (%) (dry-weight basis)
Bolt wood	
sycamore	34
pine	19
hardwood	33
Chips	
clean pine	100
whole-tree pine	93
whole-tree sycamore	145
mixed hardwood	46
whole-tree hardwood (fresh)	136
whole-tree hardwood (dried)	40
pine slash (fresh)	130
pine slash (dried)	80
Chunks	
whole-tree sycamore	24

Table 3. Chip-diameter distributions used in tests.

Mesh size (cm)	Whole-tree sycamore	Clean pine	Whole-tree pine	Whole-tree hardwood	Mixed hardwood
		----------(%)----------			
2.0	0.2	0.0	1.4	1.8	0.3
1.5	0.4	0.0	1.2	2.8	0.5
1.25	0.9	0.7	1.4	2.9	1.6
1.0	5.8	1.0	4.4	6.4	4.1
0.5	64.7	46.5	50.4	54.4	71.0
0.25	19.8	41.7	32.6	23.2	17.2
Fines	8.4	10.1	16.0	8.4	5.2

Procedures

Bolt Wood: To simulate hauling small, tree-length wood, two racks were constructed from tubing and channel steel measuring 30.5 by 45.7 cm, interior dimension. Sycamore, pine, and hardwood bolts were loaded in the racks using two treatments: butts oriented toward one end, and butts alternated. The racks were manually loaded with random selections from the available bolts. The rack was considered full when the addition of another tree raised the stack height above the top of the bunk standards. A straight edge was used to test for this condition. Cross-sectional area of the stacked wood at each end of the rack was determined by resting a straight edge across the bunk width on top of the two stems highest in the stack. The points where the straight edge intersected the vertical bunk standards defined a quadrilateral that was considered as end area.

It was assumed that the volume of the space within the bunk occupied by the wood could be approximated as the region bounded on the ends by the quadrilaterals, as determined above, with opposite corners connected by straight lines. Under this assumption, occupied volume was then calculated from the equation $V = (Z1 + Z2 + Z3 + Z4)/4 * L * W$, where V was volume, Z1, Z2, Z3, and Z4 were corner heights of the occupied space determined as outlined above, L was length between the racks, and W was width between the rack standards (fig. 1).

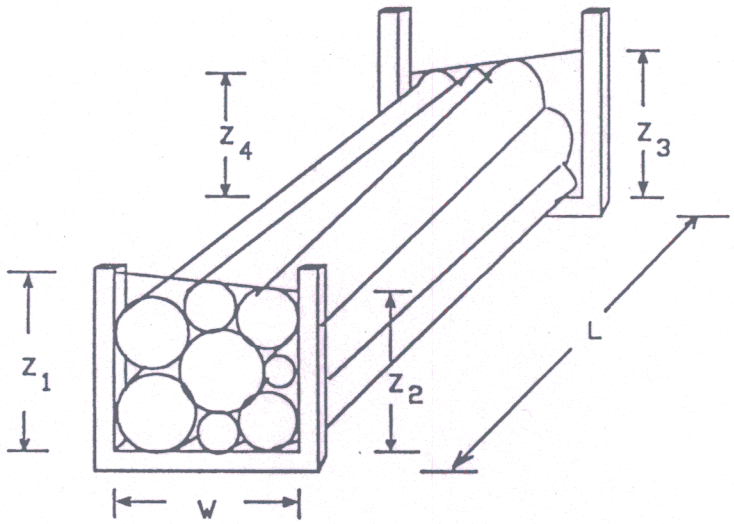

Figure 1. Bolt wood test rack and volume measurements.

Smalian's formula was used to calculate the volume of individual stems. Each stem used in the study was tagged, and the wood and bark volume in any replicate of the test was assumed to be the sum of the individual stem volumes. An ovendried weight was also determined for each stem, and these values were used in calculating densities.

After measuring the end areas of the stacked wood, the stems were bound near the butt end for the butt-oriented tests (both ends in alternated butt tests) with a chain. The chain was

tightened using a come-along until reaching a tensile load of approximately 8,900N. End areas were then remeasured and a new occupied volume calculated. This procedure was uniform for all species tests except for the pine-oriented butt test. In that case, both ends of the stems were bound with a chain.

Chip/chunk Vibration: The effect of vibration on chip and chunk densities was determined by shaking a full box of known volume for a fixed time and at a fixed frequency and amplitude, then subsequently measuring the amount of material needed to refill the box. The box was constructed of 1.91-cm-thick plywood, with one side made of plexiglass, and cube-shaped, with interior dimensions of 30.5 cm on a side. A chip-segregator platform was used for vibrating the box and material. Frequency of the vibrations was 3.9 Hz, mainly in a horizontal direction, with displacement of 3.05 cm. The box was shaken for 4 minutes.

The box was filled from a bucket of material scooped from a bin containing a large supply. It was filled to overflowing, and the excess material was removed by dragging a straight edge across the top. Material was scraped off until the straight edge could be slid along the top of the box in two directions without removing any more material. The box was then weighed, covered with a lid, and fixed to the chip segregator for vibration. After vibration, the box was removed from the vibrator, refilled, then reweighed. Densities of the vibrated and unvibrated material were based on ovendried weights.

Chip/chunk Compaction: The compaction test was done using the same box, filled in the same manner as in the vibration tests. The slash material was placed in the box by hand. After filling, the box was loaded using an aluminum plate measuring 30.4 by 30.4 by .95 cm. The center of the plate was attached to the end of a ram on a hydraulic press. Because of the compressibility of the chips and slash and the limited stroke length of the hydraulic press used, load was applied in two stages. Initially, the material was compressed until the maximum stroke of the press was achieved. The pressure was then released and an extension was added. The additional stroke length was not needed to reach the desired 4,137 kPa gauge pressure for the chunked material. Once this pressure was achieved, the compression was stopped and the load held constant for 1 minute, then released. The box was removed from the press, then refilled and weighed. Again, ovendried densities were used.

RESULTS

Drying Tests

Figure 2 shows the moisture content for the tree-length sycamore. At the end of 100 days, the stems were still drying, but the moisture content was less than 40 percent (dry basis) for all diameter classes. Drying rate was higher for trees in the 5 to 8 cm d.b.h.-class vs 10 to 13 cm. The difference, however, was not significant.

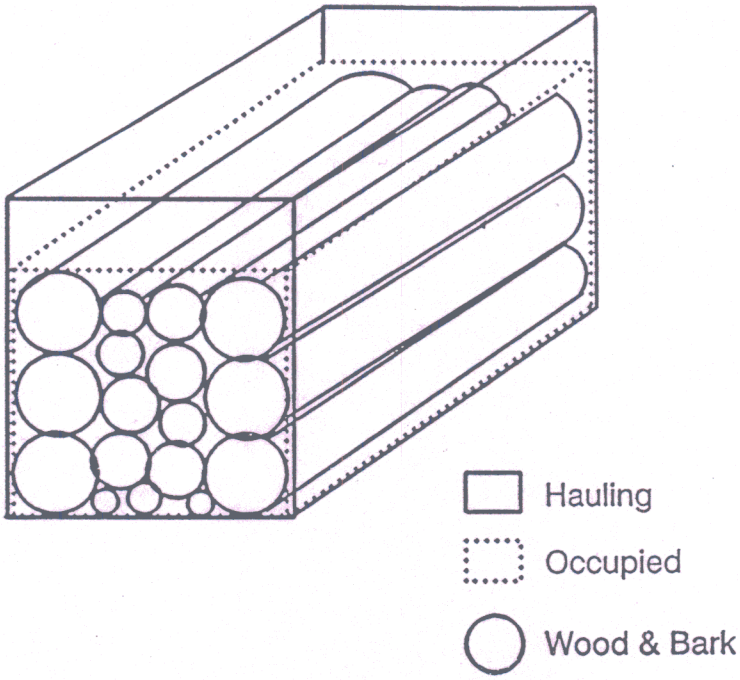

Figure 2. Bolt wood space/volume definitions for test rack.

However, chips are very sensitive to rainfall as shown in figure 3. In addition to the sycamore chips discussed, drying tests were also completed on some mill-run mixed hardwood and pine chips for comparison. In all cases, the chips dried to about 40- to 45- percent moisture (dry basis), and were very sensitive to rainfall.

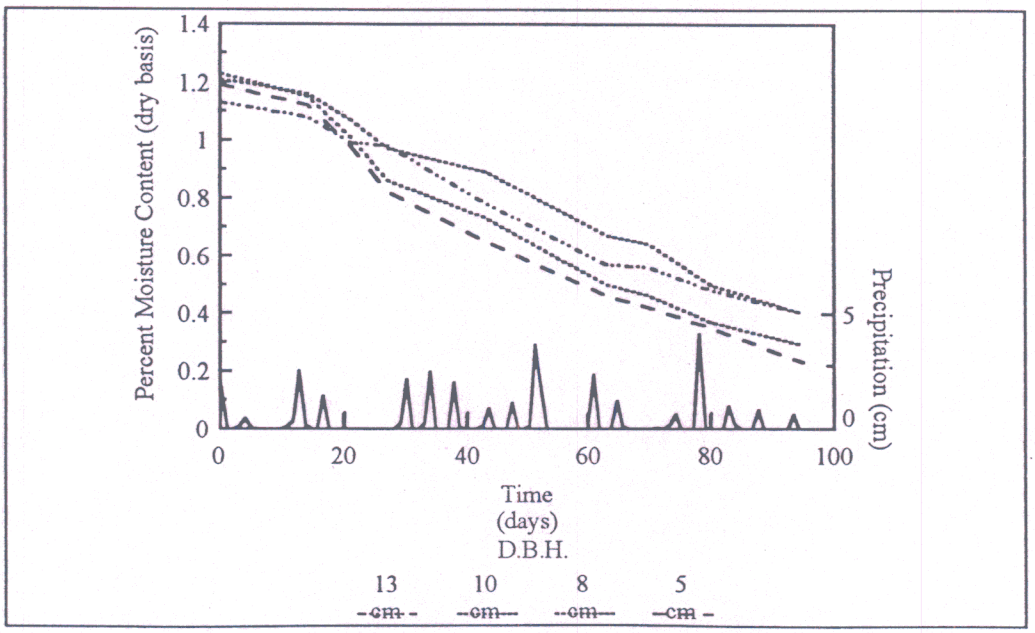

Figure 3. Moisture loss for winter/spring air-drying of sycamore bolts.

Bolt Wood

In the following discussion, hauling density refers to the amount of space within the total rack volume actually occupied by wood and bark. The term "occupied density" is used for the density of the space bounded by the convex hull of the region within the rack actually containing wood (fig. 4). Tables 4 and 5 summarize the volumetric and bulk density test results, respectively. None of the treatments could achieve better than 50-percent utilization of available space as wood and bark. In fact, only the pine/alternated butt treatment achieved better than 40-percent utilization of space as wood and bark. Bolt-wood densities of the rack space hauling density ranged from 159 to 227 kg/m^3 for oriented butts and 203 to 293 kg/m^3 for alternated butts. These densities are sufficient for maximum payload if these test results are scaleable to full-truck sizes.

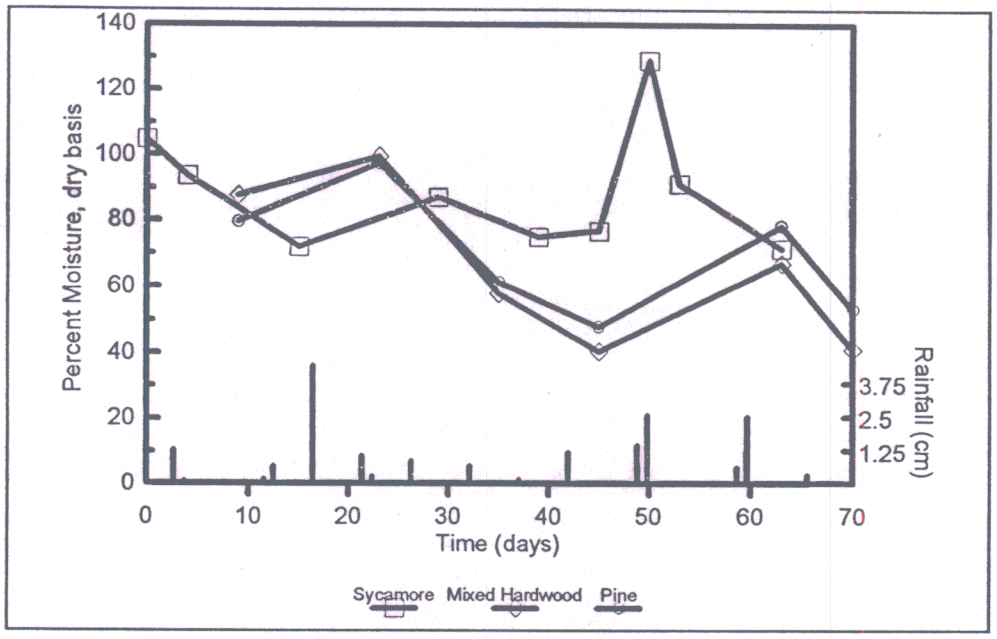

Figure 4. Moisture loss for winter/spring air-drying of several species of chips.

Alternating the butts of the trees significantly increased the density of wood in the rack ($P < 0.05$, $n = 8$). Magnitude of the increases was dependent on a number of factors, mainly species. Alternation seemed to have its greatest beneficial effect for the mixed hardwood bolts, with a 58-percent increase in hauling density. This was probably due to the form of the hardwood bolts. The increases in occupied density because of alternating butts were much lower -- less than 10 percent in the hardwood species. This indicated that alternating butt ends only marginally increased the efficiency of the stacking. The benefit of alternating was due to the increased rack volume that could be filled with additional wood.

Table 4. Bolt wood rack test summary for volumes.

Material	No. of obs.	Percent of rack (haul) space		
		Unbound		Bound
		Wood/bark	Occupied	Occupied
		--------mean (std. dev.)--------		
Sycamore				
oriented	6	30.7 (2.5)	64.2 (5.3)	53.0 (6.1)
alternated	3	39.3 (0.0)	75.6 (1.1)	79.5 (4.1)
Pine				
oriented	5	34.3 (2.2)	73.3 (4.2)	63.7 (1.8)
alternated	3	46.9 (2.1)	83.9 (6.5)	79.9 (1.3)
Hardwood				
oriented	11	25.0 (2.8)	59.4 (6.1)	-
alternated	5	38.7 (2.6)	91.1 (4.3)	-

Note: Bolt length was 4.3 m for sycamore and 6.1 m for the pine and hardwood bolts. Densities are dry weights. Total rack (haul) space was 0.75 m^3 for pine and hardwood and 0.52 m^3 for sycamore. Binding force averaged 8.7 kN. All comparisons of oriented vs alternated within species type were significantly different from zero, $P < 0.05$.

Table 5. Bolt wood rack test summary for bulk densities.

Material	Density (kg/m^3)				
	Unbound			Bound	
	Rack	Occupied	Wood/bark	Rack	Occupied
	---------- mean (std. dev.) ----------				
Sycamore					
oriented	158.6 (14.4)	248.3 (11.2)	512.4 (4.8)	158.6 (14.3)	301.1 (36.0)
alternated	203.4 (0.0)	269.1 (3.2)	519.0 (3.2)	203.4 (0.0)	256.3 (13.9)
Pine					
oriented	227.4 (8.0)	310.7 (19.2)	664.7 (56.0)	225.8 (8.0)	355.5 *(25.6)
alternated	302.7 (11.2)	363.6 (25.2)	647.1 (11.2)	302.7 (11.2)	379.6 (19.2)
Hardwood					
oriented	185.8 (16.0)	314.0 (23.2)	746.4 (31.0)	- -	- -
alternated	293.1 (12.7)	322.0 (8.6)	759.2 (30.5)	- -	- -

Note: Bolt length was 4.3 m for sycamore and 6.1 m for the pine and hardwood bolts. Densities are dry weights. Total haul space available in rack was 0.75 m^3 for pine and hardwood, and 0.52 m^3 for sycamore. Bound force average 8.7 kN. Number of observations same as volume analyses.

* All oriented vs alternated comparisons of means within species were significantly different from zero ($P < 0.05$) except the pine/bound test.

Binding of the racked bolts was effective in increasing the occupied density of the wood by about 20 percent in the sycamore and 15 percent in the pine. This was only true of the bolts stacked with oriented butts; there was no apparent increase in density for the alternated butt treatment.

Vibration

All tested materials showed a significant increase in dry bulk density in response to vibration (table 6) ($P < 0.05$, $n = 8$). The increase was remarkably uniform -- about 20 percent in all cases. It would be interesting to test whether or not the increase, and its uniformity, were related to frequency or amplitude of vibration.

Table 6. Before and after vibration (dry) densities.

Variable	No. of obs.	Mean	Std. Dev.	Min.	Max.
			----------kg/m^3----------		
Clean pine chips					
unvibrated	5	171.0	2.5	167.5	173.3
after refill	5	209.8	4.5	202.7	214.5
Whole-tree pine chips					
unvibrated	5	152.2	1.7	151.0	154.0
after refill	5	182.4	2.7	181.2	187.3
Whole-tree sycamore chips					
unvibrated	6	139.8	3.5	134.6	144.2
after refill	6	169.8	2.5	165.8	173.0
Whole-tree sycamore chunks					
unvibrated	5	210.7	0	210.7	210.7
after refill	5	246.3	5.3	238.8	252.9
Mixed-hardwood chips					
unvibrated	5	153.7	2.2	150.6	156.7
after refill	5	185.0	4.6	178.2	190.5
Whole-tree hardwood chips					
unvibrated	5	206.0	6.1	200.4	216.4
after refill	5	247.7	5.2	244.5	256.5
Whole-tree hardwood chips after 7 days of drying					
unvibrated	5	203.9	9.6	191.1	215.6
after refill	5	252.9	9.6	240.1	264.6
Pine slash					
unvibrated	5	74.6	10.6	64.5	89.7
after refill	5	93.6	8.6	84.1	103.7
Pine slash after 7 days of drying					
unvibrated	5	59.9	9.7	47.8	73.3
after refill	5	73.9	7.3	63.7	82.8

Note: All densities are ovendried weights.

Final bulk densities varied with species and type of material. The highest densities were found in the whole-tree hardwood chips, with the air-dried chips showing a slightly higher final density. Clean and whole-tree pine chips had intermediate densities, and sycamore chips, the

lowest among all chipped materials. Sycamore chunks, however, had a density comparable to the mixed hardwood chips. Density of pine slash after vibration was about one-third to one-half that of the other materials. It was not known why the dry slash had a final dry density nearly 30 percent lower than the green slash; it may be that moisture content affects settling or compacting characteristics.

Compaction

Increases in final dry density after compaction were more variable, but again all materials tested showed a significant increase (table 7) ($P < 0.05$, $n = 8$). With the exception of the sycamore chunks, the increase in final density was comparable to, or greater than, the increase due to vibration. Final densities of the compacted material were also higher, again with the exception of the sycamore chunks.

Table 7. Before and after compaction (dry) densities.

Variable	No. of obs.	Mean	Std. Dev.	Min.	Max.
			---------kg/m^3---------		
Clean pine chips					
unvibrated	5	176.3	3.6	173.3	182.2
after refill	5	214.5	2.1	211.5	217.4
Whole-tree pine chips					
unvibrated	5	156.4	3.1	153.4	159.5
after refill	5	201.2	2.7	196.3	202.4
Whole-tree sycamore chips					
unvibrated	5	138.0	2.7	134.6	139.4
after refill	5	175.9	3.1	173.0	177.8
Whole-tree sycamore chunks					
unvibrated	5	220.1	4.7	215.4	224.8
after refill	5	230.4	3.9	224.3	234.2
Mixed-hardwood chips					
unvibrated	5	156.7	2.2	153.7	159.8
after refill	5	193.0	2.6	190.5	196.7
Whole-tree hardwood chips					
unvibrated	5	211.2	6.7	203.9	220.2
after refill	5	273.2	5.8	269.2	281.4
Pine slash (fresh)					
unvibrated	5	74.9	9.6	63.3	87.6
after refill	5	107.0	7.7	97.3	116.8
Pine slash					
after 7 days of drying					
unvibrated	5	62.4	7.7	54.1	73.3
after refill	5	95.6	7.5	86.0	101.9

Note: Densities are dry weight.

Compaction had the largest percentage effect on density of green slash. The effect was not nearly as pronounced on the dry slash, which had only about half the increase in density as the green material. The whole-tree chips of all three types of material (sycamore, pine, and mixed hardwood) showed a fairly uniform increase in density (about 30 percent), which was greater than clean material of the same type. Comparison of the final density of the whole-tree vs clean material indicated that the clean material had lower density in the mixed hardwood species, but higher in the pine.

General

Final dry bulk densities of all materials (table 8) except slash were over 170 kg/m^3 or greater. Assuming a moisture content of 100 percent dry basis, these densities should be sufficient to ensure a full payload in most types of carrier systems. The slash material, compacted or vibrated as in these tests, had final dry density less than 110 kg/m^3. These values would be marginally economic at best.

Table 8. Final densities and percentage of increases for vibration and compaction tests.

	Vibration		Compaction	
Material	Final density (kg/m^3)	Increase (%)	Final density (kg/m^3)	Increase (%)
Clean pine chips	209.3	22.7	214.5	22.0
Whole-tree pine chips	182.4	19.8	201.2	30.0
Sycamore chips	169.8	22.2	175.9	28.3
Sycamore chunks	246.3	17.3	230.4	4.7
Mixed hardwood chips	185.0	20.3	193.0	23.3
Whole-tree hardwood chips	247.7	20.0	273.2	29.3
Whole-tree hardwood chips, dry	252.9	24.5	-	-
Pine slash	93.6	24.1	107.0	41.4
Pine slash, dry	73.9	21.7	95.6	18.6

Note: Densities are ovendried weight.

Comparing the final (occupied) densities for sycamore in figure 5 (sycamore was the only species that had all product forms), it is clear that stacked bolt wood is more dense than chips and chunks of the same species. This would tend to favor tree-length harvest systems for biomass utilization if it has sufficient form, length, and diameter. This conclusion is based on the assumption, however, that both chips and roundwood are equally as efficient in utilizing available legal hauling space. This will not always be the case, especially if stems are not fully delimbed or stacking efficiency of roundwood is degraded because of misshapen trees. Chips

offer the advantages of a greater degree of utilization of standing biomass and a more consistent load size. The other species had the same general trends.

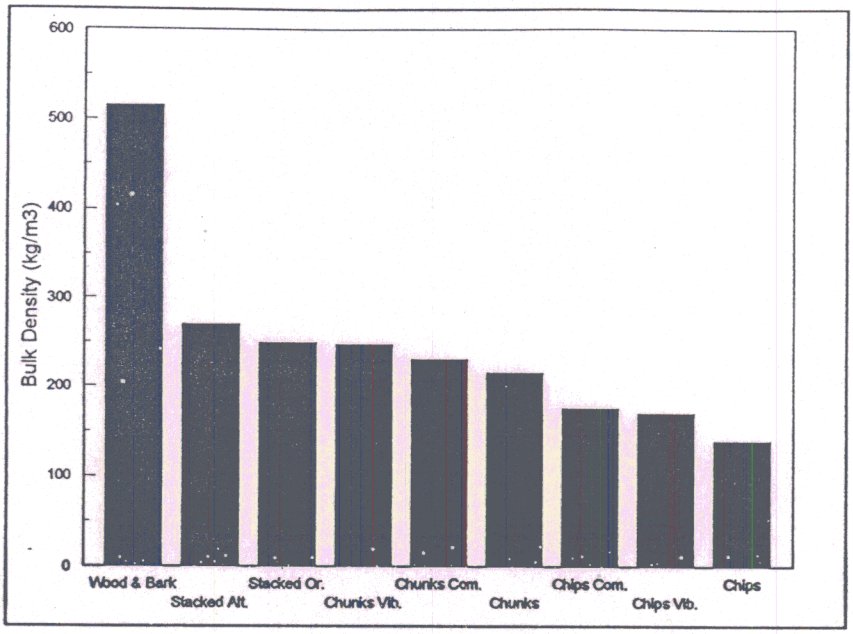

Figure 5. Product bulk densities for sycamore.

CONCLUSIONS

Transport of small-sized wood products or residues is generally not economical unless some method of densification is employed. Bolt lengths of small trees have higher density of occupied space than either chipped or chunked material of the same species composition. Overall density of bolt wood stacked uniformly (butts oriented), including haul rack space not filled, was somewhat lower than that for the same material chipped. Alternating the butt ends increased the overall density, but did not increase the density of occupied space. Vibration of chipped or chunked materials increased bulk density by about 20 percent for the species types tested. Compaction of chipped or chunked material also resulted in bulk density increases, but the magnitude was dependent on species and form of the material (chunks were only marginally compacted).

REFERENCES

Adler, T.J. 1985. An analysis of wood transport systems: costs and external impacts. Hanover, NH: Thayer School of Engineering, Dartmouth College. 39 p. In cooperation with: U.S. Department of Agriculture, Forest Service, Northeastern Forest Experiment Station, Burlington, VT.

Ames, Glenn. 1980. Wood fuel costs. In: Proceedings of the symposium Wood Energy Economics, 1980 April 30, Atlanta, GA. Atlanta, GA: Georgia Institute of Technology Engineering Experiment Station: 44-66.

Arthur, J.F; Kepner, R.A.; Dobie, J.B.; Milier, G.E.; Parsons, P.S. 1982. Tub grinder performance with crop and forest residues. Transaction of the ASAE. 25(6): 1,488-1,494.

Barnett, Paul E.; Sirois, Donald L.; Ashmore, Colin. 1986. Reduction of biomass moisture by crushing/splitting - a concept. In: Rockwood, Donald L. ed. Proceedings of the 1985 Southern Forest Biomass Workshop, 1985 June 11-14;Gainesville, FL: University of Florida Press : 13-16.

Carlsson, Torbjörn. 1981. Hauling of compacted slash. Report 1981-02-20. Forskningsstiftelsen Skogsarbeten. Sweden.

Curtin, D.T.; Brooks, R.T.; Forrester, W.R.; Paul, J.G. 1980. Biomass harvesting system test and demonstration. Tech. Note B40. Norris, TN: Tennessee Valley Authority. 43 p.

Danielsson, Bengt-Olof. 1983. Harvesting and transportation of small whole trees in Sweden. ASAE paper no. 83-1599. ASAE 2950 Niles Road, St. Joseph, MI. 17 p.

Danielsson, Bengt-Olof. 1990. Chunkwood as wood fuel. Biomass. 22: 211-228.

Danielsson, Bengt-Olof; Marks, Jorgen; Sall, Hans-Olof. 1977. Compressing small trees and tree components. Report no. 119-1977. Department of Operational Efficiency, Royal College of Forestry, Garpenberg, Sweden.

Eza, D.A.; McMinn, J.W.; Dress, P.E. 1984. Cost-effective trucking distances for woody biomass fuels. Gen. Tech. Rep. SE-326. Asheville, NC: U.S. Department of Agriculture, Forest Service, Southeastern Forest Experiment Station. 3 p.

FERIC. 1990. A databank of transportation equipment for small trees and forest residues. Published by IEA/BEA Task VI Activity 3: Available from: USDA Forest Service, DeVall Drive, Auburn University, AL 36849: 47 p.

Forrester, Patrick D. 1993. Portable hogs and grinders for processing woodwaste. FERIC Field Note no.: General-30. FERIC, 2601 East Mall, Vancouver, B.C., Canada V6T 1Z4: 2 p.

Fridley, J.; Burkhardt, T.H. 1981. Densifying forest biomass into large round bales. ASAE Paper No. 81-1599. St. Joseph, MI: American Society of Agricultural Engineers. 21 p.

Guimier, D.Y. 1985. Evaluation of forest biomass compaction systems. Spec. Rep. SR-30. Pointe Claire, Quebec, Canada: Forest Engineering Research Institute of Canada. 64 p.

Hartsough, B.R. 1990. Product/harvesting options for agroforestry plantations in the San Joaquin Valley, California. ASAE Paper No. 90-7546. St. Joseph, MI: American Society of Agricultural Engineers. 19 p.

Hartsough, B.R.; Nakamura, G. 1990. Harvesting eucalyptus for fuel chips. California Agriculture. 44(1): 7-8.

Hassan, Awatif El-Domiaty. 1976. Compaction of wood chips - energy cost. ASAE paper no. 76-1568. ASAE, 2950 Niles Road, St. Joseph, MI 49085. 17 p.

Haygreen, John G. 1981. Potential for compression drying of green wood chip fuel. Forest Products Journal. 31(8): 43-54.

Howell, Michael. 1993. Pulpwood prices in the Southeast, 1991. Forest Service Research Note SE-366. U.S. Department of Agriculture, Forest Service, Southeastern Forest Experiment Station, Asheville, NC. 6 p.

Hyde, P.E.; Corder, S.E. 1971. Transportation costs in Oregon for wood and bark residues. Forest Products Journal. 21(10): 17-25.

Jenkins, B.M. 1983. Module systems applied to biomass. ASAE Paper No. 83-3553. St. Joseph, MI: American Society of Agricultural Engineers. 20 p.

Johnson, Vern. 1985. In-woods shredding of logging residues at roadside. In: Comminution of Wood and Bark, Proceedings no. 7336; 1984 October 1-3; Chicago. Madison, WI. Forest Products Research Society. 137-138.

Larsson, M.; Carlsson, T. 1982. Trucking of logging residues and tree sections. In: Proceedings of the 6th international FPRS industrial wood energy forum '82; Vol. 1; 1982 March 8-10; Washington, DC. Madison, WI: Forest Products Research Society 137-148.

Mattson, J.A.; Karsky, R. 1985. Developments in wood chunking technology. In: Proceedings of an FPRS conference; Comminution of wood and bark; 1984 October 1-3; Chicago, IL. Madison, WI: Forest Products Research Society 169-180.

Miles, J.A. 1981. A new method to recover logging residues for energy. Report to U.C. Appropriate Technology. University of California, Berkeley, CA 94720. 5 p.

Miles, J.A.; Miller, G.E. 1982. New approaches to harvesting chaparral for energy. In: Proceedings of the symposium on dynamics and management of Mediterranean-type ecosystems, 1981 June 22-26, San Diego CA. Albany CA: USDA Forest Service Gen. Tech. Rep. PSW-58. Pacific Southwest Experiment Station. 620.

Miller, D.E.; Straka, T.J.; Stokes, B.J.; Watson, W.F. 1987. Productivity and cost of conventional understory biomass harvesting systems. Forest Products Journal. 37(5): 39-43.

Puttock, G.D. 1987. The economics of collecting and processing whole-tree chips and logging residues for energy. Forest Products Journal. 37(6): 15-20.

Schiess, P.; Yonaka, K. 1982. Evaluation of new concepts in biomass fiber field processing and transportation. New York: Academic Press, Inc. 31 p.

Sirois, Donald L.; Rawlins, Cynthia L.; Stokes, Bryce J. 1991. Evaluation of moisture reduction in small diameter trees after crushing. Bioresource Technology. 37:53-60.

Stokes, B.J.; McDonald, T.P.; Kelley, T. (In press). Transpirational Drying and Costs for Transporting Woody Biomass - A Preliminary Review. In: Proceedings of IEA Task IX, Activity 6 Meeting; 1993 May 16-22; Fredericton, N.B. Canada.

Stuart, William B.; Porter, Carl D.; Walbridge, Thomas A.; Oderwald, Richard G. 1981. Economics of modifying harvesting systems to recover energy wood. Forest Products Journal. 31(8):37-42.

Walbridge, T.A.; Stuart, W.B. 1979. A new approach to harvesting, transportation, and storing logging residues. In: An integrated investigation of procurement, harvesting, drying, transportation and storage of woody biomass; Blacksburg, VA: Virginia Polytechnic Institute and State University 15 p.

Watson, W.F.; Ragan, J.R.; Straka, T.J.; Stokes, B.J. 1987. Economic analysis of potential fuelwood sources. In: Proceedings of the 1986 Society of American Foresters National Convention, Forests, the World and the Profession; 1986 October 5-8; Birmingham, AL. Bethesda, MD: Society of American Foresters: 339-342.

SVERIGES LANTBRUKSUNIVERSITET
Institutionen för skogsteknik
Uppsatser och Resultat nr 278 • 1995

IEA/BA Task IX
Proceedings of a Workshop on

Preparation and Supply of High Quality Wood Fuels

held in
Garpenberg, Sweden
13-16 June, 1994

Editors:
Jan Erik Mattsson, C. Paul Mitchell
and Kerstin Tordmar

The Swedish University of Agricultural Sciences
Faculty of Forestry
Department of Operational Efficiency
Research Notes No. 278

Garpenberg 1995

ISSN 0282-2377
ISRN SLU-ST-UPPRLT--278--SE