182.

United States
Department of
Agriculture

Forest Service

**Southern Forest
Experiment Station**

New Orleans,
Louisiana

Proceedings Reprint

EVALUATION OF ROLL DESIGNS FOR A ROLL CRUSHER/SPLITTER BIOMASS HARVESTER: TEST BENCH RESULTS

Colin Ashmore, Donald L. Sirois, and
Bryce J. Stokes

In: Proceedings of the 1986 Southern Forest Biomass Workshop; 1986 June 16 - 19; Knoxville, TN. Norris, TN: Tennessee Valley Authority; 1986: 113-119.

EVALUATION OF ROLL DESIGNS FOR A ROLL CRUSHER/SPLITTER BIOMASS HARVESTER: TEST BENCH RESULTS[1/]

COLIN ASHMORE, DONALD L. SIROIS, AND BRYCE J. STOKES[2/]

Abstract.--Four different roll designs were evaluated on a test bench roll crusher/splitter to determine feeding and crushing efficiencies. For each design, different gap settings for the primary and secondary rolls were tested at two hydraulic cylinder pressures on the primary crush roll to determine their ability to crush and/or feed tree bolts. Seven different diameter classes (1-7 inches) and two southern species, loblolly pine (Pinus taeda) and sweetgum (Liquidambar styraciflua), were used for the tests. The results of the test combinations showed that a 1/2-inch primary roll gap and a 500-psi cylinder compression pressure, combined with a 1-inch secondary roll gap, allowed the greatest range of material to feed through the system. A roll design with a combination of serrated and smooth-angled bars was the best overall feed roll surface. Splitting of the tree bolts had the greatest effect on increasing rate of wood moisture loss.

INTRODUCTION

Increased demands for forest products and energy will require better utilization of the forest resources. Improved utilization of woody biomass will also reduce costs of forest harvesting and site preparation (Watson et al. 1986).

Examples of potential sources of woody biomass are small diameter trees and brush growing on powerline rights-of-ways (ROW). Utilizing ROW biomass may help defray some of the high costs of ROW maintenance (Barnett et al. 1985).

Two problems are generally encountered when utilizing small diameter trees for energy: the high moisture contents and the handling of the multi-stems. An alternative to conventional methods of processing small diameter trees for energy use is roll crushing/splitting (Du Sault 1984, Barnett and Sirois 1985, and Barnett et al. 1985). The concept involves the crushing and splitting of stems to expedite field drying and to facilitate handling. This method has been considered a feasible alternative for handling stems found in short-rotation harvesting (Stuart et al. 1986).

Jones (1982) reported on the development of a test bench machine used for crushing and splitting trees. Jones designed the prototype machine for the Forest Engineering Research Institute of Canada (FERIC) to determine horsepower requirements, operating restraints, and roll designs; and to compare drying efficiencies between crushed and whole tree biomass for Canadian conditions. This paper reports on one of these objectives, the evaluation of roll designs by the Southern Forest Experiment Station for effectively feeding woody Southern biomass into a set of crush rolls. For each of four roll designs, the specific objectives were to determine feeding efficiencies, crushing/ splitting efficiencies, and operating restraints that would allow the greatest range of material size to feed through the primary and secondary rolls.

DESCRIPTION OF MACHINE

The test bench roll crusher/splitter (fig. 1) consists of two sets of 20-inch diameter steel rolls mounted in two vertical, fixed stanchions.

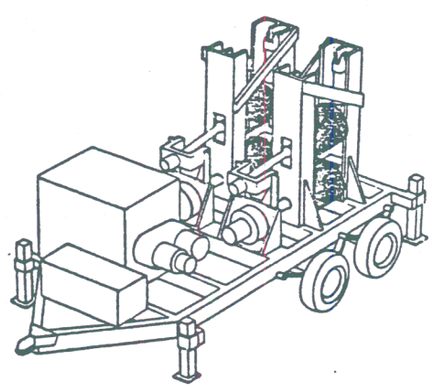

Figure 1. Test bench crusher/splitter (Du Sault 1984).

1/ Paper presented at the Eighth Annual Southern Biomass Workshop, Knoxville, Tennessee, June 16-19, 1986.

2/ Ashmore, Sirois, and Stokes are research engineers with the Southern Forest Experiment Station, USDA Forest Service, Auburn, AL 36849.

A 175 Hp, gasoline engine furnishes power to 3 hydraulic pumps. Two separate hydraulic motors, with speed-reducing gear drives, power the bottom roll of each set. Crushing or compression force is provided by four hydraulic cylinders (4-inch diameter) mounted on the movable upper rolls of each set. The upper rolls can be manipulated up and down, and the compression force is controlled using the hydraulic cylinders and relief valves. The vertical set of rolls that first feed the material are termed herein as the primary rolls; and the second set, the secondary rolls. The control valves on the test bench are designed to control hydraulic flow and pressure to each set of rolls and to the hydraulic cylinders.

The original rolls were formed from embossed steel tread plate shells welded over heavy steel rolls. These embossed shells did not provide adequate feeding of small diameter trees into the secondary rolls. To increase feeding capability, alternative shells were designed for the primary power roll to replace the embossed tread plate shells. The designs considered were (1) serrated bars, (2) spikes, (3) a combination of spikes and angled steel bars, and (4) tapered, angle-edged bars. Descriptions of the test shells (fig. 2) are as follows:

(1) BAR - serrated horizontal bars, 1 x 1 inch, were welded on 7 3/4-inch circumferential spacings, across rolled shells 3/8 inches thick (fig 2a).

(2) SPIKE - sharp, 1 1/2-inch-high steel spikes 7/8 inches in diameter were welded onto rolled shells. The spikes were 3 inches apart between the rows and 2 1/2 inches apart within the rows, offset from adjacent rows by 1 1/4 inches (fig 2b). Four horizontal bars were added to improve feeding.

(3) COMBO - 7 inch lengths of serrated-horizontally bar were welded in the center of the shell at a circumferential spacing around the shell of 5 1/4 inches. Next to each, 3/8-inch-thick and 1-inch-high bars were welded, on edge, at 45 degree angles to the roll edge (fig. 2c).

(4) TRACK - 3/8-inch-thick, 15-inch-long tapered steel plates were welded at 30 degree angles to the roll edge, extending from the center of the rolls. Each angle-edged metal track, tapered from 1/2 inches high at the center to 1 1/2 inches high at the outside edge of the shell, was placed at 7 1/2-inch circumferential spacings (fig 2d).

For the secondary rolls, the embossed shells were retained and simple 3/8-inch-wide by 3/16-inch-high bars were welded, at 8-inch spacings, across the width of the powered bottom roll only.

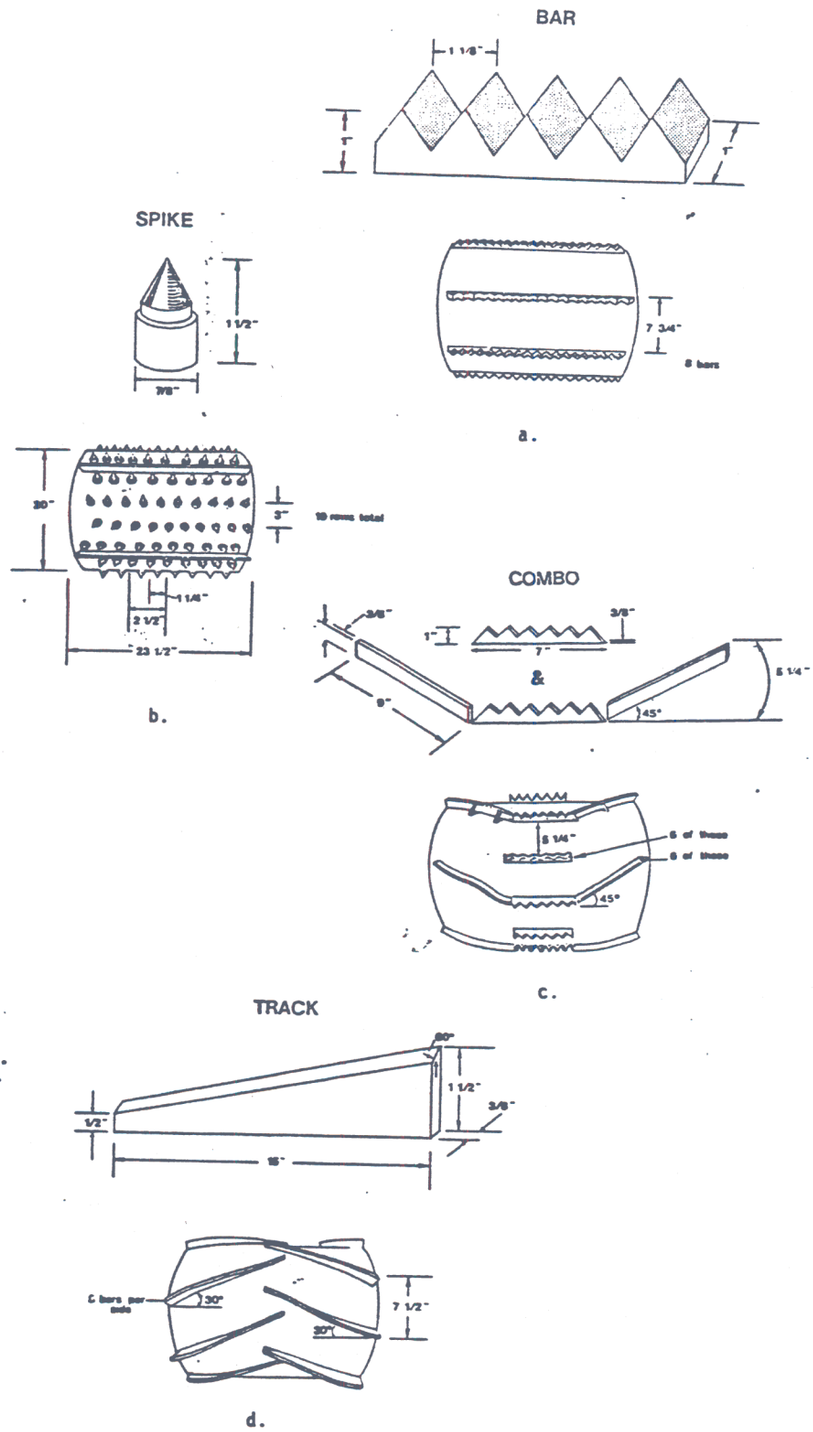

Figure 2. Roll shell designs evaluated for crushing/splitting.

TEST DESIGNS AND PROCEDURES

Objectives of the study were to determine the capability of the crush/feed roll designs to start different-size tree sections into the primary rolls; then continue to feed the material into the secondary rolls, and to determine the degree of crushing. Parameters thought to be important, other than the primary roll design, were the gap distance between the upper and lower rolls of each set, primary compression force (hydraulic pressure to the primary roll cylinders), tree species, and tree diameter.

The non-statistical test design (fig. 3) required operating the test bench machine with the four roll designs, each tested at four minimum primary roll gaps, two minimum secondary roll gaps, two primary roll compression pressures, two tree species, and tree sections of 1 to 7 inches in large end diameter. The gap distance between the secondary rolls was set at 1/2 inch or 1 inch. The primary roll gap distances were 1/2, 1, 1 1/2, or 2 inches, with pressures to the hydraulic cylinders set at 500 or 1000 psi. The hydraulic cylinder pressure of the secondary rolls had a set pressure of 2000 psi. The test species were loblolly pine (Pinus taeda) and sweetgum (Liquidambar styraciflua).

All the variable combinations were evaluated for each roll design. The roll speed was monitored on the primary and secondary rolls to ensure that the primary rolls rotated at a speed difference of less than 5 percent. This difference was determined to be the practical maximum based on observations of the crushing process. A higher speed difference resulted in excess buckling that jammed the system. If the speed of the primary rolls is less than the secondary rolls, then the wood is shaved by the excessive speed of the secondary rolls.

All test runs were completed for a given gap setting between the secondary rolls before changing to another setting. For each primary roll gap setting, the tree section diameters were tested randomly by species. Tests were completed for one primary roll cylinder pressure before the setting was changed to the other (ie: 500 psi to 1000 psi).

A conveyor belt was used to feed 5-ft tree sections into the primary rolls. This system simulated the forward travel speed of a conceptual felling/crushing machine capable of working on rights-of-ways (fig. 4).

The end of the bolt with the largest diameter was placed on the conveyor to enter the primary rolls first. The bolts had been trimmed to obtain the diameters needed for the tests. The primary and secondary rolls were closed to the desired gap settings determined by mechanical stops. Relief valves allowed the top rolls to retract upward if the force exceeded the pressure set for the hydraulic cylinders.

The bolts were fed only by the conveyor. The success of feeding and crushing/splitting was determined by the following criteria:

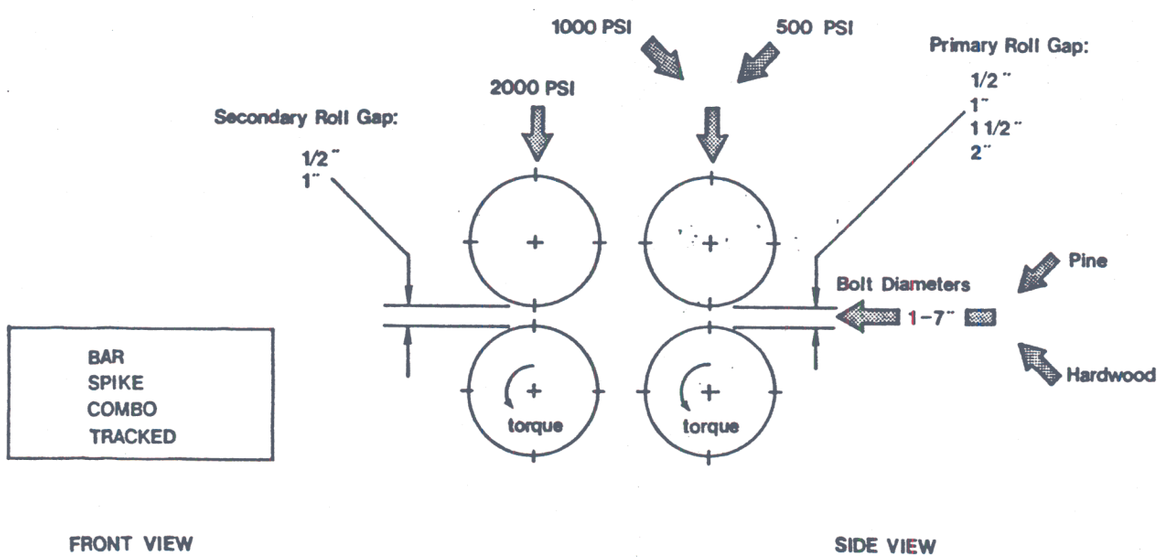

Figure 3. Test design.

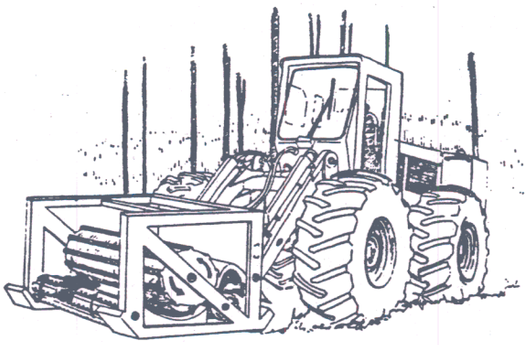

Figure 4. Artist's concept of a roll crushing/ splitting machine.

(1) NONE - bolts never entered into the primary rolls,

(2) PRIMARY - bolts entered and were fed through the primary rolls but never entered the secondary rolls because the bolt either buckled or the wood slipped on the primary rolls,

(3) SECONDARY - bolts entered and passed through the primary and secondary rolls.

To determine crushing/splitting quality for the combination of test parameters, three observations were made of the crushed bolts. A cross section was cut from the bolt 1 foot from the large end, and the number of major strands (split sections) were counted. This information was used to determine the degree of splitting. The diameter of the bolt was measured at the 1-foot reference, before and after crushing, to determine the change in bolt cross section. Finally, a sample was taken from the crushed bolt to determine moisture loss during 24 hours of drying in an oven at 215 degrees Fahrenheit. The basis for this latter evaluation was to determine if rate of moisture loss for the sample was correlated to the degree of splitting.

RESULTS

Histograms were made for each of the test combinations to determine trends for feed quality (fig. 5). The NONE, PRIMARY, and SECONDARY variables shown in the figure, representing which rolls the tree section fed through, are plotted against tree section diameters and roll type for each primary gap, secondary gap, pressure setting, and species combination.

In addition to histograms, tables showing the maximum diameter processed through the roll crusher were made (table 1). Similar tables (not shown) were made for the number of strand data, the change in tree section diameter data, and the change in moisture contest data. From the histograms and tables, trends for the primary roll gaps, the secondary roll gaps, the primary roll pressures, and species were determined.

Table 2 shows the trends for the crushing quality. For the BAR, SPIKE, and TRACK roll designs, the general trend in parameter settings for feeding a wide range of tree section diameters completely through the system was a 1/2-inch primary gap, a 1-inch secondary gap, and a 500-psi hydraulic cylinder pressure on the primary roll. A smaller gap between the primary rolls than between the secondary rolls tends to feed smaller material through the secondary rolls better. In comparison, a larger primary roll gap may accept larger diameter tree sections into the primary rolls but, due to slippage, it does not always feed smaller diameter sections through the secondary rolls. The 500-psi pressure on the primary hydraulic cylinder allows the primary crush roll to raise up (force the hydraulics through the relief valve) and feed larger diameter material. Loblolly pine generally feeds better than sweetgum. The primary gap and hydraulic pressure settings had no effect on the feeding quality of the COMBO roll design, indicating a greater flexibility in parameter selection.

The parameter settings that allow the greatest range in material sizes through the system are not necessarily the best selections of parameters for crushing and splitting the material. Tables 3 and 4 show that a 1/2-inch secondary gap and a 1000-psi hydraulic pressure on the primary roll cylinder produced the greatest number of strands and the greatest change in tree section diameter. Judging from this data, a smaller primary gap setting still gives a better friction force (less slippage) while the material is feeding. Loblolly pine was easier to crush and split than sweetgum.

The number of strands and the change in diameter data was analyzed to determine correlation to moisture loss after 24 hours of oven drying. The trends from the correlations in Tables 3 and 4 show an increased drying rate with a greater number of strands but not with an increased change in tree section diameter. Therefore, splitting (number of stands), not crushing (changing the cross section diameter), has the greatest effect on increasing moisture loss. The correlations also indicated increased drying rates for increased diameter because the number of strands and the relative change in cross section diameter was positively correlated to diameter.

The parameters selected are most likely indicating a trade-off between the crushing force

Table 1. Maximum Bolt Diameters Processed Through the Roll Crusher/Splitter

Primary pressure	Primary roll gap	Secondary pressure	Secondary roll gap	BAR		COMBO		SPIKE		TRACK	
				hw	pine	hw	pine	hw	pine	hw	pine
psi	inches	psi	inches	inches							
500	1/2	2000	1/2	3	6	3	4	2	4	-	-
	1			3	4	3	3	2	2	3	4
	1 1/2			2	3	2	4	2	3	3	3
	2			2	3	2	4	3	3	2	3
500	1/2	2000	1	4	5	4	4	4	6	-	-
	1			6	4	5	5	4	6	5	4
	1 1/2			4	6	5	6	4	5	4	5
	2			3	4	4	5	3	4	4	4
1000	1/2	2000	1/2	4	4	3	3	3	3	-	-
	1			3	3	3	5	4	3	4	4
	1 1/2			2	3	3	3	3	3	2	4
	2			3	2	2	3	2	2	2	3
1000	1/2	2000	1	4	5	4	5	5	5	-	-
	1			4	4	4	6	5	4	4	4
	1 1/2			4	4	4	5	3	4	4	5
	2			4	5	4	6	4	5	3	4

Table 2. Feeding Quality

Roll type	Primary gap	Secondary gap	Pressure	Species
BAR	The smaller the primary gap, the better the feeding	1 inch best	Better feeding at 500 psi on the primary rolls, effects pine the greatest	pine feeds better than hardwood
COMBO	no effect	1 inch best	no effect	pine feeds better than hardwood
SPIKE	The smaller the primary gap, the better the feeding	1 inch best	For pine, better feeding at 500 psi on the primary rolls For hardwood, better feeding at 1000 psi on the primary rolls	pine feeds better than hardwood
TRACK	The smaller the primary gap, the better the feeding	1 inch best	Better feeding at 500 psi on the primary rolls	pine feeds better than hardwood

Table 3. Effects on the Number of Strands and Correlations

Roll type	Primary gap	Secondary gap	Pressure	Species
BAR	the smaller the primary gap, the greater number of strands	1/2 inch best	no effect	pine had a greater number of strands
COMBO	no effect	1 inch best	the 1000 psi primary pressure produced the greatest number of strands	pine had a greater number of strands
SPIKE	the smaller the primary gap, the greater number of strands	1/2 inch best	no effect	pine had a greater number of strands
TRACK	the smaller the primary gap, the greater number of strands	1/2 inch best	the 1000 psi primary pressure produced the greatest number of strands	pine had a greater number of strands

Correlation Table for Number of Strands

Roll type	Diameter	Moisture loss
BAR	positive	positive
COMBO	"	"
SPIKE	"	"
TRACK	"	"

Table 4. Effects on Change in Tree Section Diameter and Correlations

Roll type	Primary gap	Secondary gap	Pressure	Species
BAR COMBO SPIKE TRACK	no effect	1/2 inch best	Greatest change in diameter with 1000 psi on the primary rolls	pine changed more in diameter than hardwood

Correlation Table for Change in Tree Section Diameter

Roll type	Diameter	Number of strands	moisture loss
BAR	positive	positive	no correlation
COMBO	"	"	"
SPIKE	"	"	"
TRACK	"	"	"

that can be applied before limiting the torque of the powered rolls. The maximum pressure that can be applied through the crushing rolls is a function of the torque limit of the roll drive system. The hydraulic motors driving the powered rolls will stall if the applied compression force (crushing pressure) is set too high. This was the case in many of the tests. An increased torque to the powered rolls through installation of larger drive motors would allow the user to increase the hydraulic cylinder pressure on the crushing rolls. This would increase the crushing efficiency of the system and alleviate the conflicting results between the parameters found to offer the best feeding quality and the best crushing/splitting quality.

In general, the TRACK roll design did not feed as well as the other three roll designs and should be disregarded from any future tests. The COMBO roll design was the least sensitive to the parameters settings while still doing an equally well or better job of feeding material through the primary and secondary rolls than the BAR and SPIKE designs.

CONCLUSIONS

Feeding tests from two species and 7 tree section diameters (1-7 inches) showed that a roll design with serrated and smooth-angled bars (fig. 2c) was the best overall surface for feeding and crushing/splitting small diameter trees. Trends showed that the combination of a smaller primary gap setting (1/2 inch) and a lower cylinder pressure on the primary roll (500 psi) did the best job of feeding the material in and then holding it while it fed through the secondary rolls. A secondary roll gap larger than the primary roll gap (1 inch) allowed the material to continue through the system. Splitting, not crushing, has the greatest effect on increasing the drying rate.

LITERATURE CITED

Barnett, Paul E.; Sirois, Donald L. Roll splitting as an alternative intermediate process for wood fuel. Forest Energy Newsletter; Garpenberg, Sweden: Forest Energy Secretariat, SLU; October 1985: p 37-38.

Barnett, Paul E.; Sirois, Donald L.; Ashmore, Colin. Reduction of biomass moisture by crushing/splitting - a concept. Proceedings of the Seventh Annual Southern Forest Biomass Workshop, Gainesville, FL, June 11-14, 1985. University of Florida, Gainesville, FL 1986. June 1985. p 13-16.

De Sault, Andre. Evaluation of crushing rolls configurations to process woody biomass. Proceedings of an FPRS conference "Comminution of Wood and Bark", October 1-3, 1984, Chicago, Illinois. Forest Products Research Society, Madison, WI. p. 193-200.

Jones, K.C. Development and testing of a roll splitter. Forest Engineering Institute of Canada, Enfor Project P-28. 20 p.

Stuart, W.B.; Marley, D.S.; Teel, J.B. A prototype short rotation harvester. Proceedings of The Seventh International FPRS Industrial Wood Energy '83 September 19-21, 1983, Nashville, Tennessee. Forest Products Research Society, Madison, WI. p. 167-174.

Watson, W.F.; Stokes, B.J.; Savelle, I.W. Comparisons of two methods of harvesting biomass for energy. F. Prod. J. 36(4):63-68.

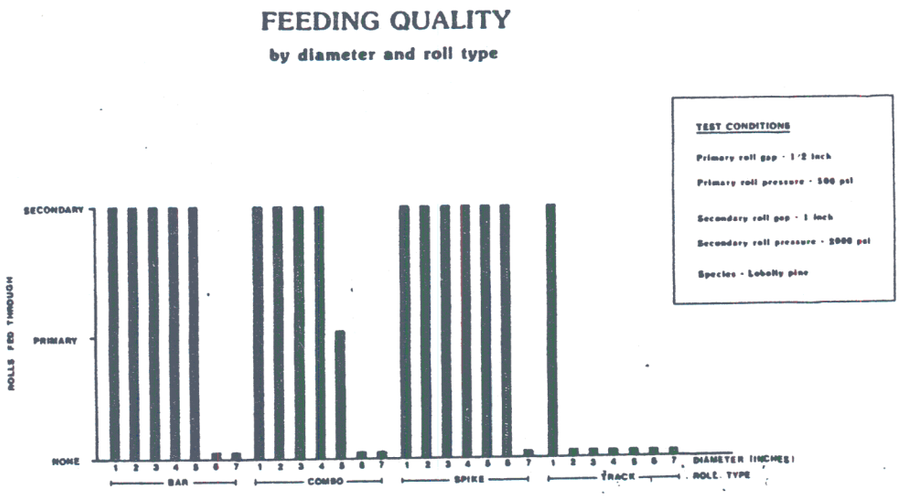

Figure 5. Sample histogram of feeding quality by tree section diameter and roll type.