MECHANICAL PROPERTIES OF STEMWOOD AND LIMBWOOD OF SEED ORCHARD LOBLOLLY PINE

R.H. MCALISTER†
H.R. POWERS
W.D. PEPPER

ABSTRACT

Tests were made on micro-bending specimens prepared from stem and limb sections of 11 rust-resistant loblolly pines from a central Georgia seed orchard. A fair correlation ($|r| = 0.45$ to 0.55) emerged between the stemwood and limbwood modulus of elasticity (MOE) and stemwood and limbwood modulus of rupture (MOR) values. An excellent correlation ($|r| = 0.8$ to 0.9) appeared between the MOE and MOR of the stemwood and also between the MOE and MOR of the limbwood. Including specimen specific gravity (SG) did not increase the prediction power of the regression equation. Further work on at least 30 forest-grown trees is planned.

A nondestructive method of determining the modulus of elasticity (MOE) of a living tree would be extremely useful to timber buyers and sellers. The MOE (stiffness) of wood is particularly important in structural applications. Wood with high MOE is more valuable than wood with low MOE. The best method for estimating the MOE of a standing tree is to remove an increment core and determine its specific gravity (SG). The relationship between SG and MOE of clear straight-grained wood is expressed as MOE = 2.36 × SG for green wood (6). However, many factors that affect SG do not affect MOE to the same degree.

Several years ago, Bendsten and Senft (1) developed a technique for determining the MOE of individual growth rings in stemwood using micro-bending specimens. This technique has been used extensively for specialized evaluation of timber stands for pulp and paper applications (5).

We theorized that the MOE of limbwood and stemwood might be correlated. There were inherent problems working with limbwood. Limbwood contains a great deal of reaction wood whose mechanical properties are much different from normal wood. Limbs are seldom straight and limb taper is pronounced. Diameter growth in limbs is much less than in stems. Eventually, we developed a method of cutting micro-bending specimens from limbwood that eliminated most of the problems.

OBJECTIVE

The objectives of this study were to determine the relationship between the MOE and MOR of stemwood to that of limbwood of loblolly pine and to make sampling recommendations for possible future studies.

MATERIALS AND PROCEDURES

A regular thinning (roguing) of 44 rust-resistant loblolly pines located on the Baldwin Seed Orchard near Milledgeville, Ga., in 1994 provided limbwood and stemwood from trees of known parentage. In a previous study that related mechanical properties to family associations, it was shown that the mechanical properties of these fast-growing seed orchard trees were vastly different from those of forest grown trees (3). However, the seed orchard trees were readily available at no cost. The trees were felled with shears. Shearing damages the stem for 24 to 30 inches above the shear line. The wood in this area is unsuitable for tests of stiffness and strength. In order to eliminate problems with splitting, a 24-inch stem section was taken from the top of the first pulpwood stick, 63 inches. The first limb was also taken. The first 11 trees were selected for analysis. Stem and limb sections were wrapped in heavy plastic and stored in a freezer at 0°F until final processing in 1996. Freezing the wood maintains its green moisture content (MC) and prevents deterioration of the specimens due to mold or fungus growth.

The authors are, respectively, Research Scientists, retired from the USDA Forest Serv., Southern Res. Sta., Asheville, NC 28802. The use of trade or firm names in this publication is for reader information and does not imply endorsement by the USDA of any product or service. This paper was received for publication in June 1999. Reprint No. 8995.
† Forest Products Society Member.
©Forest Products Society 2000.
Forest Prod. J. 50(9):91-94.

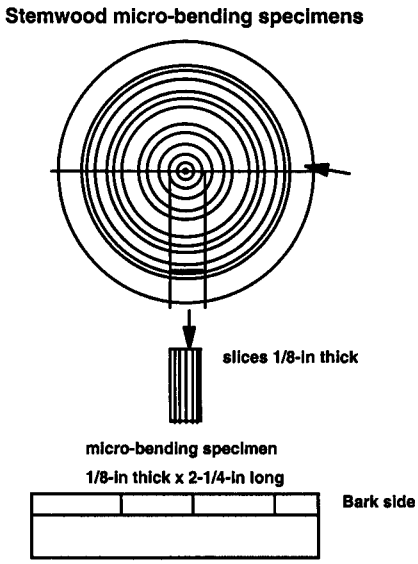

Figure 1. — Schematic of location and cutting of micro-bending specimens.

Micro-bending specimen preparation

The stem section was sawed down the pith on a bandsaw (**Fig. 1**). The half-section containing reaction wood was discarded. A radial section 1-1/2 inches wide was sawed from the remaining half-section. The radial section was crosscut into 8-inch-long sections and then sliced into 1/8-inch-thick wafers on a bandsaw using a fixed thickness guide. These 8-inch-long wafers were then crosscut to a length of 2-1/4 inches and trimmed to a width of about 1 inch parallel to the bark. Sawing parallel to the bark reduces the effect of taper. Micro-bending specimens were prepared from the limb samples in the same manner; however, the smaller limb diameters could not provide a 1-inch-wide blank. **Table 1** shows the physical characteristics of the limb and stem sections. All micro-bending specimens were stored in heavy plastic bags in a freezer at 0°F to prevent deterioration prior to testing.

Testing of specimens

The specimens were thawed at room temperature for 2 hours in the sealed plastic bag. This maintained the moisture of the specimens. They were tested in the green condition to eliminate specimen twist or curling. Ambient test conditions were approximately 70°F and 50 percent relative humidity. The micro-bending specimens were tested using a Model TT-C Instron test machine equipped with a SATEC Mk III retrofit device. The support fixture used (7) was designed for the micro-bending test with a span of 1-3/4 inches. The end supports were free to rotate. Center-point loading was applied through a 3/16-inch radius crosshead at a rate of 0.02 in./min. Specimens were weighed and measured immediately prior to test.

Loads and deflections were recorded at 3-second intervals with an analog/digital board in a computer. Test times ranged from 3 to 11 minutes. Apparent MOE and MOR were calculated by im-

TABLE 1. — Physical characteristics of limb and stem specimens.

	Limb				Stem			
Tree	Age	Diameter	Rings per in.	Latewood	Age	Radius	Rings per in.	Latewood
	(yr.)	(in.)		(%)	(yr.)	(in.)		(%)
1	10	1.2	16.7	< 20	16	3.8	4.2	< 20
2	10	2.6	9.1	< 20	16	6.1	2.6	< 20
3	5	1.4	8.3	< 20	9	2.6	3.5	< 20
4	7	1.7	10.0	< 20	10	2.7	3.8	< 20
5	12	3.0	10.9	< 20	18	6.7	2.7	< 20
6	13	3.7	8.7	< 20	19	7.6	2.5	< 20
7	11	2.0	15.7	< 20	16	6.5	2.5	< 20
8	11	2.0	13.8	< 20	17	5.9	2.8	< 20
9	10	1.6	14.3	< 20	13	6.0	2.2	< 20
10	13	2.2	13.0	< 20	15	4.5	3.3	< 20
11	10	2.0	11.0	< 20	16	5.2	3.0	< 20

TABLE 2. — Modulus of elasticity, modulus of rupture and specific gravity for micro-bending specimens by location. Average of 12 specimens.

	Limb				Stem			
Tree	MOE	MOR	SG	Test rings	MOE	MOR	SG	Test rings
	---------- (psi) ----------				---------- (psi) ----------			
1	285,220	4,896	0.400	8+	512,706	5,121	0.398	4+
2	359,838	5,912	0.406	4+	562,236	5,841	0.375	3+
3	290,188	5,537	0.452	9+	512,957	5,750	0.375	3+
4	271,955	5,260	0.505	9+	361,172	5,225	0.383	2+
5	442,687	6,919	0.457	6+	441,173	5,004	0.444	3+
6	368,724	6,684	0.463	8+	612,349	6,778	0.416	3+
7	372,015	6,308	0.431	7+	384,610	6,030	0.481	3+
8	264,178	5,226	0.449	10+	319,734	4,172	0.385	3+
9	321,182	5,943	0.440	11+	446,577	5,832	0.445	2+
10	301,880	5,825	0.468	10+	416,124	4,054	0.336	2+
11	266,274	4,506	0.383	7+	193,755	3,198	0.372	2+

porting the load/deflection data into a spreadsheet. The MOE was determined by regression techniques (*Load* = *a* + *b*(*Deflection*), where *a* is the Y-intercept and *b* is the slope) for the straight-line portion of the load-deflection curve. An r^2 of 0.95 or greater for the regression was considered acceptable. After testing, the micro-bending specimens were ovendried and reweighed. Their SG and MC at time of test were calculated based on their green dimensions and ovendry weight.

Data analysis

Stem and limb data were each obtained from 12 test specimens (four 8-in. wafers by three sub-samples per wafer). Variation in wood property values is influenced by three variance components: variation in wood properties among trees, variation among wafers within trees, and variation among sub-samples within wafers. To estimate these components and their relative importance, we used SAS procedure VARCOMP (4). Values of wood properties were averaged over test specimens for each tree. These averages were subjected to a simple correlation analysis with SAS procedure CORR. This procedure computes Pearson correlation coefficients for all pairs of variables and tests hypotheses of zero correlation.

Results and discussion

The results of testing the micro-bending specimens are shown in **Table 2**. The values for MOE and MOR are quite low in comparison with the published values of 1,400,000 psi and 7,300 psi for loblolly pine tested in the green condition (6). The low values are probably due to the extremely fast growth and open-grown character of the seed orchard trees. The objective of a seed orchard is to produce viable seed and not high quality wood fiber. Limbwood MOE and stemwood MOE are compared in **Figure 2**, which shows a relationship between the two. Limbwood MOR and stemwood MOR (**Fig. 3**) and limbwood SG and stemwood SG **Fig. 4**) also appear to be related. The correlation coefficients for the study variables are shown in **Table 3**. Note that there is a strong correlation between the MOE and MOR within both the stemwood and the limbwood. Unfortunately, the correlation between the MOE and MOR values between limbwood and stemwood are not very strong. There is a possibility that the correlation between limbwood and stemwood properties would be better for forest-grown trees of greater rotation age.

Estimated variance components for variation of wood properties among trees (V_t), variation among wafers within trees (V_w), and variation among sub-samples within wafers (V_s) were used to compute coefficients of variation (COVs) for experimental means of properties. From smallest to largest, the COVs for stem properties were 3, 6, and 8 percent for SG, MOR, and MOE, respectively. For limb data, the COVs, from smallest to largest, were 2, 4, and 5 percent, respectively for SG, MOR, and MOE. Thus, stem data are more variable than limb data, and MOE is the most variable property. A sampling design that is adequate for estimating stem value of MOE would automatically be more than adequate for estimating other properties.

Table 4 shows that total variance is dominated by V_t with relative values ranging from 54.5 to 87.0 percent. The components V_w and V_s are relatively small and of equal importance in most cases. This suggests that wafer and sub-sample numbers used in this study are adequate. However, increasing numbers of trees would result in more precise estimates and hypothesis tests.

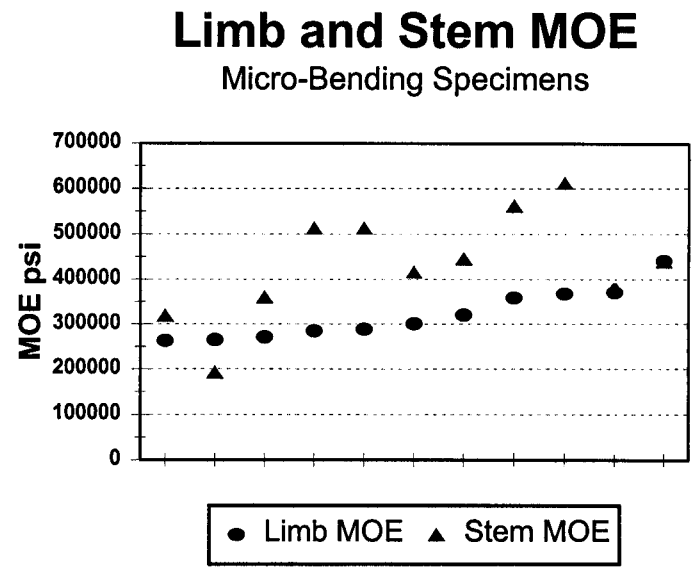

Figure 2. — Limb and stem micro-bending specimen modulus of elasticity.

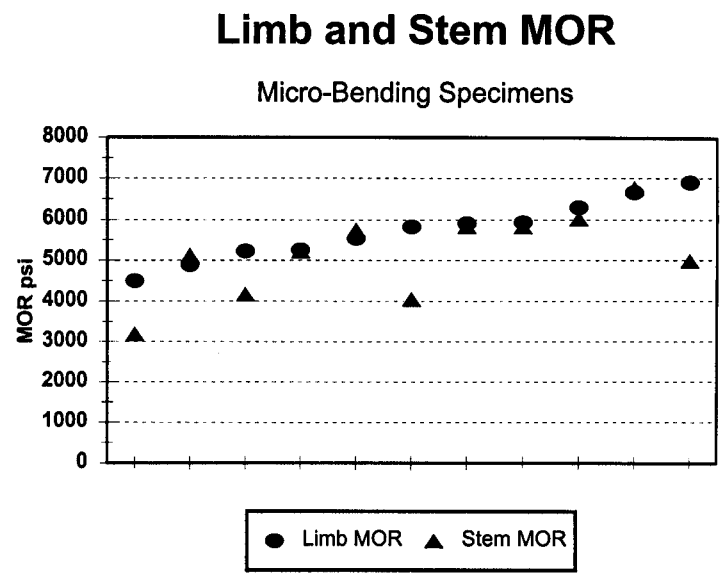

Figure 3. — Limb and stem micro-bending specimen modulus of rupture.

TABLE 3. — Relationship between stemwood and limbwood properties for micro-bending specimens from seed orchard loblolly pine.

	Stem MOE	Stem MOR	Limb MOE	Limb MOR	Stem SG	Limb SG
Stem MOE	1.0000[a]	0.80376	0.44831	0.54993	0.10494	0.13176
	0.0[b]	0.0029	0.1667	0.0801	0.7588	0.6994
Stem MOR	0.80376	1.00000	0.49825	0.62946	0.52468	0.24213
	0.0029	0.0	0.1188	0.0380	0.0975	0.4732
Limb MOE	0.44831	0.49825	1.00000	0.90290	0.61242	0.06119
	0.1667	0.1188	0.0	0.0001	0.0452	0.8582
Limb MOR	0.54993	0.62946	0.90290	1.00000	0.55010	0.38174
	0.0801	0.0380	0.0001	0.0	0.0796	0.2467
Stem SG	0.10494	0.52468	0.61242	0.55010	1.00000	-0.03452
	0.7588	0.0975	0.0452	0.0796	0.0	0.9198
Limb SG	0.13176	0.24213	0.06119	0.38174	-0.03452	1.00000
	0.6994	0.4732	0.8582	0.2467	0.9198	0.0

[a] Pearson correlation coefficients.
[b] Prob > |r| under Ho:Rho = 0/N = 11.

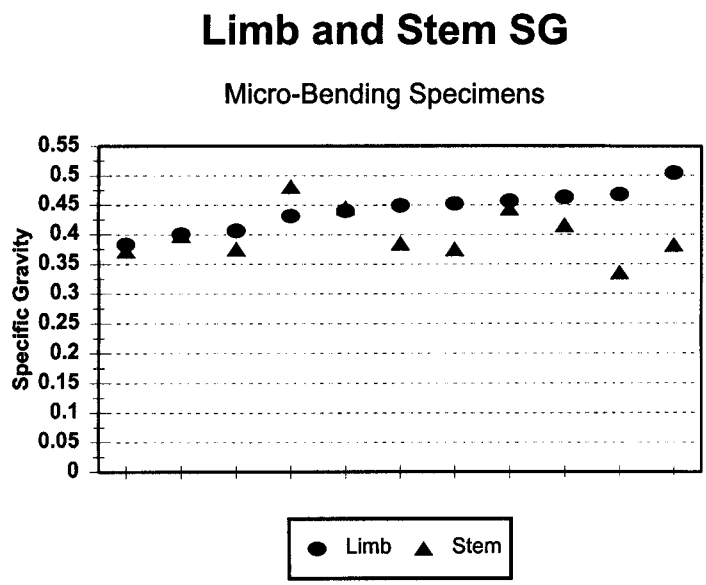

Figure 4. — Limb and stem micro-bending specimen specific gravity.

TABLE 4. — Percentage of total estimated variance due to three variance components.

	Stem	Limb
MOE		
V_t[a]	72.5	60.7
V_w[a]	13.6	13.1
V_s[a]	13.9	26.2
MOR		
V_t	84.3	54.5
V_w	8.6	20.1
V_s	7.1	25.4
SG		
V_t	87.0	62.5
V_w	2.1	17.5
V_s	10.9	20.0

The estimated standard error for the experimental mean is $V_t/T + V_w/TW + V_s/TWS$, where T = number of trees, W = number of wafers per tree, and S = number of sub-samples per wafer. We can fix $W = 4$ and $S = 3$ and observe the effect of increasing T on the COV. This is an approximation since we do not know the true standard error, but it is sufficient for practical purposes. Since 1.96 is the 0.975 percentile for the standard normal distribution, 1.96 COV is one-half the length of a 95 percent confidence interval and may be referred to as the limit of error (2). The limit of error measures the maximum distance between the experimental mean and the population mean for the confidence probability chosen. For $T = 11$, $W = 4$, and $S = 3$, the limit of error is 16 percent. If we replace $T = 11$ with $T = 20$, the limit of error decreases to 12 percent. With 30 trees we can reduce the limit of error to 10 percent, which may be approaching acceptability.

Conclusions

The relationship between the mechanical properties of stemwood and limbwood is promising enough to justify further work with a larger number of forest-grown trees. We believe that four wafers per tree and three sub-samples per wafer would be adequate for testing each wood property. At least 30 trees are recommended to perform correlation or regression analyses.

Literature Cited

1. Bendsten, B.A. and J. Senft. 1986. Mechanical and anatomical properties in individual growth rings of plantation-grown eastern cottonwood and loblolly pine. Wood and Fiber Sci 18:(1)23-28.
2. Cochran, W.G. and G.M. Cox. 1957. Experimental Designs. 2nd ed. John Wiley & Sons, Inc., New York. 611 pp.
3. McAlister, R.H. and H.R. Powers, Jr. 1994. A comparison of some physical and mechanical properties of full-sib and half-sib loblolly pines. Forest Prod J. 44:(2)42-44.
4. SAS Institute. 1987. SAS/STAT Guide for Personal Computers, Version 6 edition. SAS, Cary, N.C. 1,028 pp.
5. Shepard, R.K. and J.E. Shottafer. 1992. Specific gravity and mechanical property - age relationships in red pine. Forest Prod J. 42(7/8):60-66
6. U.S. Forest Products Laboratory. 1987. Wood Handbook: Wood as an Engineering Material. USDA Agri. Handb. 72, rev. USDA Forest Serv., Forest Prod. Lab., Madison, Wis. 466 pp.
7. Wolcott, M.P., J.F. Philip, J.E. Shotafer, and R.K. Shepard. 1986. Preparation and testing of micro-bending specimens. Forest Prod J. 36(11-12):9-71.