United States
Department of
Agriculture

Forest Service

Lamination of Hardwood Composite Framing With an Emulsion Polymer-Isocyanate Adhesive and Radio-Frequency Curing

Southeastern Forest
Experiment Station

Research Paper
SE-262

Charles B. Vick

March 1987

Southeastern Forest Experiment Station
P. O. Box 2680
Asheville, North Carolina 28802

Lamination of Hardwood Composite Framing With an Emulsion Polymer-Isocyanate Adhesive and Radio-Frequency Curing

Charles B. Vick
Research Scientist
Forestry Sciences Laboratory
Athens, Georgia

ABSTRACT

An emulsion polymer/isocyanate adhesive was used to laminate strips of yellow-poplar and sweetgum parallel-laminated veneer to the edges of oriented flakeboard (of the same species) in composite framing. The adhesive was cured by radio-frequency generated heat. Critical strength and durability properties of adhesive bonds were measured over a range of assumed but typical material surface characteristics and factory assembly conditions. Dry shear strength and wood failure, wet shear strength, and resistance to delamination easily exceeded proposed minimum requirements. Wet wood failure on sweetgum was marginal in meeting the 70 percent requirement; however, certain combinations of assembly conditions corrected this problem. Bonds to yellow-poplar were decidedly better than those to sweetgum. Moisture content of materials at 3 or 6 percent was not critical to joint performance for most assembly conditions. Adhesive spread rate was important from the standpoint of both bond performance and cost, with the rate of 65 lb/M ft^2 near optimum. Generally, it was advantageous to spread the veneer surface rather than the core edge. The balance of moisture in the adhesive film, dependent on material moisture content, spread rate, spreading surface, and closed assembly time, was critical to joint performance.

Keywords: Yellow-poplar, sweetgum, parallel-laminated veneer, oriented flakeboard, shear strength, wood failure, resistance to delamination.

Several adhesives have been researched for use in laminating veneer to composite lumber. Among them was an emulsion polymer/isocyanate (EPI) adhesive with a unique combination of high strength and durability, and an ability to cure at room temperature (>42 °F) within 1 hour (Vick 1984). This adhesive is ideally suited for a factory of limited production capacity without expensive heat-curing equipment. For a factory of greater production capacity, however, radio-frequency (RF) curing is the only practicable alternative for high-speed production bonding. Conventional hot-press equipment cannot cure these bonds at high-production speeds because of the great distance between the innermost bondline and the heat source, and the relatively slow rate at which heat transfers through wood. Another EPI adhesive, similar in composition and cost, can be cured with RF heating without arcing.

The purpose of this study was to investigate the working, strength, and durability properties of this second EPI adhesive when used to bond yellow-poplar and sweetgum veneer laminates to the highly porous edges of hardwood flakeboard core (of the same two species) by using RF heating. Bond properties were determined over a range of assumed but typical material surface characteristics and laminating assembly conditions.

Performance Requirements

Minimum performance requirements and quality-control tests have been proposed for ensuring acceptable strength and durability of adhesive bonds between veneer and core in composite framing (Koenigshof 1985). They are based either on research in the composite framing program or on industry-accepted standards for bonded wood products:

Properties	Minimum requirements
Shear strength[a, b]	
Dry	500 lb/in^2
Wet	250 lb/in^2
Wood failure[a]	
Dry	80 percent
Wet	70 percent
Resistance to delamination[c]	<10 percent

[a]ASTM 1982; [b]Koenigshof 1985; [c]AITC 1983.

Materials

Adhesive

The adhesive was an aqueous emulsion of polymer with hydroxyl functional groups that cross-link with a polymeric isocyanate to form a urethane structure (Pagel and Luckman 1981; Terbilcox and Luckman 1985). It belongs to a generic group of adhesives called emulsion polymer/isocyanates, or EPI's. The degree of cross-linking, and to a lesser degree the rate of reaction, can be controlled by the amount of reactive isocyanate added to the mixture. In this experiment, 20 parts (weight basis) of isocyanate were added to 100 parts of emulsion. The adhesive sets initially by loss of water either through evaporation or absorption into the wood structure. It also sets by chemical cross-linking which takes place when the emulsion polymer and isocyanate come into close molecular proximity as water is lost and the isocyanate protective mechanism deactivates.

Veneer Laminates

Veneer laminates for sections of 2- by 8-inch composite framing were prepared from 1/4-inch-thick rotary-cut yellow-poplar and sweetgum veneers. Four plies of veneer, all of the same species, were parallel-laminated so that open lathe checks in the veneer faced toward the core. Veneers of both species were dried to 3 percent moisture content (%MC), then laminated with phenol-resorcinol-formaldehyde (PRF) adhesive. The laminates were cut into strips 1-1/2 inches wide and 12 inches long, and were randomly divided into two groups of equal size. One group was conditioned to 6 %MC and the other group was reconditioned to 3 %MC.

Flakeboard Cores

Flakeboard cores were prepared from 3/4-inch-thick, 40 lb/ft^3, homogeneous, electrostatically oriented flakeboard with 6 percent phenolic resin binder. The flakes were yellow-poplar and sweetgum mixed in equal proportions by weight. The drum-cut flakes were separated into 1/4- and 1/8-inch mesh screen sizes to make two types of flakeboard. To make the cores 1-1/2 inches thick, two 3/4-inch-thick flakeboards were laminated together. Before laminating, the flakeboards were dried to 3 %MC. They were laminated with a PRF adhesive, then cut into 5-1/4-inch-wide by 12-inch-long sections. These core sections, representing 1/4- and 1/8-inch flake sizes, were randomly divided into two equal size groups and conditioned to either 3 or 6 %MC.

Methods

Experimental Design

This experiment was designed to determine how the critical strength and durability properties of EPI bonds would be affected by important material surface characteristics and assembly factors. These experimental factors, with respective levels, are listed below. The experimental design was in a randomized block with factorial arrangement

Experimental factors	Levels of factors
Flake size (blocks)	1) 1/4-inch mesh screen 2) 1/8-inch mesh screen
Veneer species	1) Yellow-poplar 2) Sweetgum
Moisture content	1) 3 percent 2) 6 percent
Adhesive spread rate	1) 50 lb/M ft^2 2) 65 lb/M ft^2 3) 80 lb/M ft^2
Surfaces spread with adhesive	1) Veneer 2) Core
Closed assembly time	1) 5 minutes 2) 10 minutes 3) 15 minutes
Pressure	1) 175 lb/in^2
RF curing conditions	1) 1 minute at 0.75 A and 2.88 kW

of material and assembly factors into 2 x 2 x 3 x 2 x 3 = 72 treatment combinations within each of two blocks.

Each test joint assembly (2- by 8-inch composite section, as shown in figure 1) consisted of a yellow-poplar veneer laminate bonded to one edge of a core, and a sweetgum laminate bonded to the other edge. One edge was considered a replicate, from which one observation of each of five physical properties was made. Each observation was replicated four times within a single treatment combination over both flake sizes (blocks). Within each flake size (block), each treatment combination was replicated twice.

The effects of treatment combinations were determined from measurements of shear strength and wood failure in the dry and water-saturated conditions, and resistance to delamination after two cycles of vacuum-pressure soaking in water and drying (VPSD). An analysis of variance (ANOVA) was conducted for each of the five properties to determine which experimental factors were statistically significant. Any significant factor was further analyzed by Duncan's new multiple range test to determine which levels of treatment were different from each other within that factor. Significant interactions were subanalyzed.

The experiment was divided into two blocks to determine if the two flake sizes had significant main or interacting effects on properties. Flake size was not expected to be significant, but this precautionary step was available and used nevertheless.

Specimens

Block-shear specimens (fig. 1) were used to test bond shear strength and wood failure in both dry and water-soaked conditions. Resistance to delamination after two cycles of VPSD treatments was tested on the cross sections of composite framing shown in figure 1. Two block-shear specimens and one delamination specimen were cut from each test bondline.

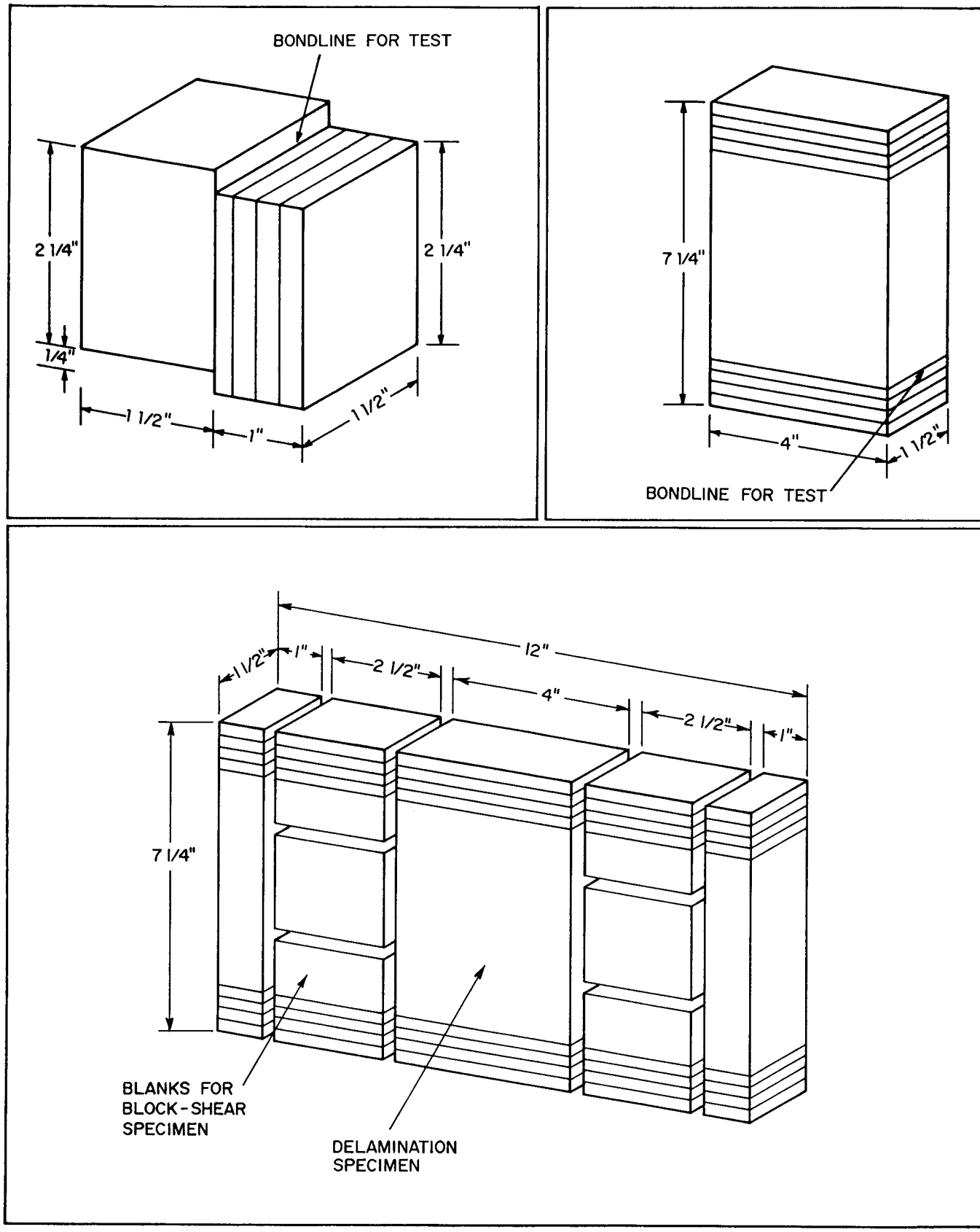

Figure 1.--Configuration and dimensions of block-shear specimen (upper left), cross section for delamination test (upper right), and locations for cutting specimens from a composite assembly (lower).

Specimen Preparation

Composite framing assemblies were prepared by bonding one 4-ply veneer laminate of yellow-poplar and one of sweetgum, each 1-1/2 inches wide by 12 inches long, to each edge of a 1-1/2-inch-thick flakeboard core, also 12 inches long. Adhesive was spread onto the appropriate bonding surface with a roller according to the prescribed spread rate for each treatment combination. The accuracy of the spread was controlled by automatically weighing adhesive as it was spread on each surface. Adhesive-spread veneer laminates or cores were assembled and held together without pressure for the prescribed closed assembly time.

The adhesive was cured by a Mann-Russell, Model 200, 13 kVA electronic generator. A plate current of 0.75 ampere with 2.88 kilowatts RF output was applied for 1 minute, with pressure maintained at 175 lb/in^2. This power density setting produced a bondline temperature of 165 ± 5 °F by the end of the 1-minute curing period. Optimum power density was not an experimental factor; however, exploratory tests of settings indicated that a plate current of 1.0 ampere at 4.31 kilowatts produced bonds of unacceptable quality. The higher power density caused boiling of water in the adhesive and wood. Adhesive dilution, coupled with greatly increased adhesive mobility, caused the adhesive to overpenetrate the flakeboard core. By lowering plate current to 0.75 ampere, overpenetration was eliminated and bond quality improved.

After bonding, test assemblies were cut into specimens as shown in figure 1. Before testing for dry shear strength, specimens laminated at 3 %MC were conditioned to a moisture content of approximately 6 percent. Specimens already near 6 %MC were reconditioned to the same moisture content.

Specimen Testing

Tests for strength and wood failure in dry and water-soaked conditions were conducted according to the glueline shear test in ASTM D 1037-78 (ASTM 1982), except that dimensions of the specimen were changed as shown in figure 1 and the rate of loading was increased from 0.024 to 0.10 inch per minute.

Block-shear specimens were saturated with water by submerging them in tapwater in a pressure vessel. A vacuum of 25 inches of mercury was drawn and held for 30 minutes. Afterward, a pressure of 75 ± 2 lb/in^2 was applied for 2 hours. Specimens were tested immediately after the soaking procedure.

Delamination specimens were subjected to AITC Test T110, Cyclic Delamination Test (AITC 1983). This procedure was extremely severe and essentially consisted of two cycles of vacuum-pressure soaking, as described above, with each cycle followed by 10 to 15 hours of drying in dry air at 160 °F. Delamination was measured in the test bondline across the 1-1/2-inch width at both ends of the composite section. Open joints were measured to the nearest 0.05 inch. Delaminations that measured less than 0.10 inch, and were more than 0.20 inch apart, were ignored. The total length of open joints on both end surfaces, divided by the total length of end joints (about 3 inches), constituted the measure of delamination.

Results and Discussion

Flake Size

Whether flakes were retained on 1/4- or 1/8-inch mesh screens was not a significant factor for any of the five properties tested (table 1). This was indicated in the first series of ANOVA where screen size was included as an experimental factor. Since screen size was not significant, it was excluded from all subsequent ANOVA where only species, moisture content, spread rate, spreading surface, and closed assembly time were experimental factors.

Species

The EPI adhesive bonded significantly better to yellow-poplar veneer

Table 1.--Effects of material surface charactertistics and assembly factors on strength properties and resistance to delamination of EPI bonds in composite framing

Experimental factors	Dry shear strength (lb/in^2)	Dry wood failure (%)	Wet shear strength (lb/in^2)	Wet wood failure (%)	Delamination (%)
			SCREEN SIZE		
1/4-in screen	1,150 A	93 A	477 A	76 A	4.4 A
1/8-in screen	1,129 A	93 A	485 A	72 A	3.9 A
			SPECIES		
Yellow-poplar	1,184 A	93 A	520 A	81 A	2.1 A
Sweetgum	1,085 B	94 A	436 B	67 B	6.3 B
			MOISTURE CONTENT		
3 percent	1,115 A	95 A	463 A	74 A	3.9 A
6 percent	1,153 B	92 B	493 B	74 A	4.4 A
			ADHESIVE SPREAD RATE		
50 lb/M ft^2	1,042 A	95 A	458 A	73 A	5.0 A
65 lb/M ft^2	1,158 B	94 A	477 AB	76 A	2.8 B
80 lb/M ft^2	1,202 B	92 B	499 B	73 A	4.7 AB
			SURFACES SPREAD WITH ADHESIVE		
Veneer	1,141 A	94 A	483 A	77 A	2.8 A
Core	1,127 A	93 A	473 A	71 B	5.6 B
			CLOSED ASSEMBLY TIME		
5 minutes	1,165 A	92 A	477 A	71 A	5.0 A
10 minutes	1,108 B	93 AB	486 A	76 A	3.5 A
15 minutes	1,129 AB	95 B	471 A	76 A	4.0 A

In comparisons of treatment means within a given property, means followed by the same letter are not significantly different at $P > 0.05$.

laminates than to sweetgum in tests of dry and wet shear strength, wet wood failure, and resistance to delamination. With the exception of the 67 percent average wet wood failure of bonds to sweetgum, all other property averages exceeded the minimum requirements in the proposed quality-control standards (Koenigshof 1985).

No interactions of any importance occurred between species and any of the other experimental factors.

It is quite probable that wet wood failure of bonds to sweetgum veneer laminates could be improved by several percentage points and exceed the 70 percent minimum requirement (Koenigshof 1985). To investigate this possibility, subanalyses were conducted on bonds to sweetgum only. The analysis indicated that wet wood failure improved significantly when adhesive was spread on the veneer rather than the core edge. Resistance to delamination also improved significantly. Further subanalysis of sweetgum veneer-spread surfaces did not reveal any other experimental factors that significantly affected wet wood failure--at least in a statistical sense. However, from 68 percent, wet wood failure increased to an average of 75 percent when moisture content was lowered from 6 percent to 3 percent. Also, average delamination decreased from 6.3 percent to 2.3 percent by lowering moisture content to 3 percent. Moisture content was a significant factor in decreasing percentage of delamination. It was not a significant factor in increasing percentage of wood failure because of the confounding effects of closed assembly time and spread rate. Nevertheless, by lowering moisture content of materials to 3 percent and spreading adhesive on the veneer surface only, wet wood failure of bonds to sweetgum should be increased enough to exceed the 70 percent minimum requirement. Resistance to delamination should be increased as well.

Not only is sweetgum more difficult than yellow-poplar to bond to porous flakeboard core edges with EPI adhesive, it is also difficult with phenol-formaldehyde (PF) adhesives. Furthermore, sweetgum veneers are difficult to bond with PF adhesives when making plywood. Part of the solution to problems with both aqueous adhesives is to control moisture content of the sweetgum at an unusually low 2 to 3 %MC and within narrow limits. Excessive moisture leads to increased adhesive mobility and overpenetration of the core edges at elevated temperatures. Sweetgum has higher density than yellow-poplar and is more difficult to penetrate with adhesive. Extractives are also present at the surfaces of sweetgum, which may inhibit wetting and penetration of adhesive. The net effect of excessive moisture in the sweetgum veneer laminates and flakeboard core is overpenetration of flakeboard core and inadequate penetration of the veneer.

Having learned that yellow-poplar can be bonded more effectively over a wider range of assembly conditions than sweetgum with the EPI adhesive, a laminator can use this knowledge to advantage in his operation--particularly if veneer species are to be mixed in the same laminate. During veneer lay-up, yellow-poplar veneer can be located at the bottom of the laminate so that it is always bonded to the edge of the flakeboard core. This one step would do much to ensure higher quality bonds, and certainly lessen problems that would be associated with bonding sweetgum to the core edge.

Moisture Content

Moisture content of materials was a significant factor in tests of dry shear strength, dry wood failure, and wet shear strength (table 1). Significantly stronger dry bonds developed on wood at 6 %MC than at 3 %MC. Likewise, wet shear strength on 6 %MC wood was significantly stronger than on 3 %MC wood. The results of dry wood failure tests were inconsistent with the above findings in that the higher (95 percent) wood failure occurred at 3 %MC rather than at 6 %MC.

Even though small differences between property values were significantly

different at the 3 and 6 %MC levels, from the standpoint of adequacy of product performance, these small differences seem inconsequential in determining whether the wood should be dried to the 3 or 6 %MC level. From an operational standpoint, the relatively wide range of moisture content from 3 to 6 percent would be a distinct advantage in that narrow moisture content limits need not be strictly maintained. However, it is important to consider what was discussed earlier--that wet wood failure and resistance to delamination of bonds to sweetgum can be improved by drying materials to 3 %MC. From a property value standpoint, it did not matter whether yellow-poplar was dried to 3 or 6 %MC. More energy is required to dry to 3 than to 6 %MC, however.

There were significant interactions between moisture content and spread rate. In these interactions, the influence of moisture on mobility of the EPI adhesive can best be seen. Note in table 2 that dry shear strength was lowest and delamination highest at the lowest of the three spread rates, and lowest of two moisture contents. Clearly, adhesive mobility was inhibited by low moisture availability from the 3 %MC wood and low spread rate. Adhesive transfer to the unspread opposite surface improved significantly by the increase in moisture content from 3 to 6 percent. At the 65 lb/M ft^2 spread rate where bond strengths increased, the effect of increasing moisture content to 6 percent was not as pronounced over all three properties. However, when spread rate increased to 80 lb/M ft^2, indications of excessive adhesive mobility in the form of overpenetration and squeeze-out appeared at the 3 percent level. With the higher spread rate, the lower moisture content led to improved property values.

There were also significant interactions between moisture content and closed assembly time (table 3). Larger amounts of moisture in the wood, as at the 6 %MC level, compensated for moisture losses from the adhesive at the longest 15-minute assembly time, thereby significantly increasing wet strength and wood failure and resistance to delamination. Property values were lower at the 3 %MC level because insufficient moisture was available to cause effective adhesive transfer. On the other hand, at the shorter assembly times of 10 and 5 minutes, higher moisture content proved detrimental to development of the best bonds, and 3 %MC produced

Table 2.--Interactions of adhesive spread rate and moisture content for dry shear strength, dry wood failure, and delamination of EPI bonds

Spread rate (lb/M ft^2)	Moisture content (%)	Dry shear strength (lb/in^2)	Dry wood failure (%)	Delamination (%)
50	3	994 A	94 A	7.2 A
	6	1,090 B	95 A	2.9 B
65	3	1,124 A	97 A	1.8 A
	6	1,192 B	91 B	3.7 A
80	3	1,227 A	93 A	2.9 A
	6	1,176 A	90 A	6.6 B

In comparisons of treatment means within a given property, means followed by the same letter are not significantly different at $P \geq 0.05$.

Table 3.--Interactions of closed assembly time and moisture content for wet shear strength, wet wood failure, and delamination of EPI bonds

Assembly time (min)	Moisture content (%)	Wet shear strength (lb/in^2)	Wet wood failure (%)	Delamination (%)
5	3	475 A	72 A	4.4 A
	6	479 A	69 A	5.7 A
10	3	484 A	81 A	2.0 A
	6	488 A	71 B	4.9 B
15	3	430 A	71 A	5.4 A
	6	512 B	80 B	2.5 B

In comparisons of treatment means within a given property, means followed by the same letter are not significantly different at $P > 0.05$.

more favorable results. Here, excessive adhesive mobility, occasioned by excessive moisture from within the wood and the lack of drying of the adhesive film during the short assembly time, led to adhesive overpenetration. Neither adhesive dry-out nor overpenetration was serious within the parameters of this experiment; however, the effects were becoming evident. As indicated in table 3, it appears the optimum combination of moisture content and assembly time was 10 minutes closed assembly at 3 %MC and 15 minutes at 6 %MC. Again, the key to successful bonding with this aqueous adhesive is careful control of adhesive mobility through control of moisture in the adhesive films. Such control is particularly critical with RF curing where boiling occurs within seconds and the adhesive becomes highly mobile, probably leading to overpenetration of the highly porous flakeboard core edges by the adhesive.

Spread Rate

Spread rate was a most influential factor in determining property values (table 1). Only in wet wood failure was spread rate not a significant factor. The lowest spread rate (50 lb/M ft^2) generally produced the lowest property values. However, it did not necessarily follow that the highest spread rate (80 lb/M ft^2) produced the highest values. Statistical comparisons in table 1 indicate the 65 lb/M ft^2 spread rate did not produce significantly inferior results to the 80 lb/M ft^2 spread rate, except perhaps in dry wood failure where the difference was only 2 percent.

The discussion of the interaction between moisture content and spread rate offers an explanation of why the 65 lb/M ft^2 spread rate is near optimum when compared with the other rates. In a broad sense, the overall property values at the 80 lb/M ft^2 spread rate were lowered by somewhat poorer bonding results at the 6 %MC level. At the 50 lb/M ft^2 rate, property values were lowered by poorer performance at the 3 %MC level. On balance, property values at the 65 lb/M ft^2 spread rate were least affected by either of the two moisture content levels (tables 1, 3).

Significant interactions between spread rate and spreading surface occurred in tests of wet shear strength and delamination. Comparisons from subanalysis show these effects (table 4). At the 50 lb/M ft^2 spread rate, the advantage in spreading the veneer sur-

Table 4.--Interactions of adhesive spread rate and spreading surface for wet shear strength and delamination of EPI bonds

Spread rate (lb/M ft^2)	Spreading surface	Wet shear strength (lb/in^2)	Delamination (%)
50	Core	433 A	8.6 A
	Veneer	484 B	1.5 B
65	Core	485 A	3.2 A
	Veneer	469 A	2.3 A
80	Core	502 A	5.0 A
	Veneer	495 A	4.5 A

In comparisons of treatment means within a given property, means followed by the same letter are not significantly different at $P > 0.05$.

Table 5.--Interactions of adhesive spread rate and closed assembly time on delamination of EPI bonds

Spread rate (lb/M ft^2)	Assembly time (min)	Delamination (%)
50	5	4.1 A
	10	3.1 A
	15	7.9 B
65	5	3.6 A
	10	2.1 A
	15	2.5 A
80	5	7.5 A
	10	5.2 AB
	15	1.5 B

In comparisons of treatment means within a given property, means followed by the same letter are not significantly different at $P > 0.05$.

face rather than the core was clearly evident. The core surface was quite porous relative to the veneer surface, and, at a low spread rate, insufficient adhesive was available for transfer after penetration of the core surface. These surface effects were not statistically significant at the other two spread rates.

Another significant interaction between spread rate and assembly time occurred in the test of resistance to delamination (table 5). Again the effects of moisture on bondline integrity were statistically evident. At a spread rate of 50 lb/M ft^2, assembly times of 5 and 10 minutes were short enough to avoid overdrying of the adhesive film. But at 15 minutes, drying had progressed to the point where delamination increased significantly. At the 65 lb/M ft^2 spread rate, length of closed assembly had no significant effect and, as previously indicated, was near optimum. At the 80 lb/M ft^2 spread rate, the shorter assembly times tended to lower bond integrity because of excessive adhesive mobility and overpenetration. However, during the 15-minute assembly time, sufficient time was available for excessive moisture to dissipate from the heavier adhesive spread, and improved bond integrity was the result.

Spreading Surface

By spreading adhesive on the veneer surface rather than the core edge, resistance to delamination and wet wood failure were significantly improved. However, in tests of the other three properties, significant differences were not detected (table 1). A subanalysis of the interaction between spreading surface and spread rate (table 4) provides some insight into why resistance to delamination was improved by spreading the adhesive on the veneer. As discussed, the core edge was porous relative to the veneer, and, when spread at the 50 lb/M ft^2 rate, not enough free-flowing adhesive was available, after penetration and drying, for transfer to the opposite surface. Although there were no significant differences in delamination due to spreading surface at either the 65 or 80 lb/M ft^2 spread rate, slightly improved bond integrity did result by spreading veneer rather than core.

Closed Assembly Time

In the ANOVA for main effects, closed assembly time was marginally significant only in the test of dry shear strength. Even though the test for differences between averages shows that the 5-minute assembly time produced significantly higher strength than the 10-minute assembly time, these differences are considered of little practical significance (table 1). Significant differences between averages in dry wood failure have been ignored because significant differences were not detected.

Assembly time does show up as a significant interaction with moisture content in tests of wet shear strength, wet wood failure, and resistance to delamination (table 3). At longer assembly times, the higher moisture content leads to better performance, whereas at shorter assembly times, the lower moisture content produces more favorable bond performance. The proper balance of moisture in the adhesive film during cure avoids the extremes of dry-out and overpenetration, and is the key to successful RF bonding with the EPI adhesive.

The other significant interaction that occurred with assembly time involved spread rate in the test of resistance to delamination (table 5). Generally, the longest assembly time at the lowest spread rate tended to cause increasing delamination, and short assembly time at the highest spread rate also led to increasing delamination. The longest assembly time at the highest spread rate tended to decrease delamination.

Conclusions

The EPI adhesive developed very strong and durable bonds in most of the 72 treatment combinations tested. Dry

shear strength and wood failure, wet shear strength, and resistance to delamination easily exceeded proposed minimum property-value requirements. Wet wood failure of sweetgum was marginal in meeting the 70 percent wood failure requirement. However, by spreading adhesive on the veneer laminate rather than the core, and drying the wood to 3 rather than 6 %MC, wet wood failure of bonds to sweetgum can be improved enough to meet requirements.

Species was a strong factor influencing property values. Bonds to yellow-poplar were decidedly better than those to sweetgum. If veneer lay-up procedures could be designed so that yellow-poplar veneer was always bonded to flakeboard core edges, quality-control problems associated with bonding sweetgum could be avoided.

Although moisture content of materials proved significant in its effect on several property values, the difference appeared inconsequential from the standpoint of product performance--particularly for yellow-poplar. A relatively wide range in moisture content (from 3 to 6 percent) would be a distinct advantage in that narrow limits in moisture control need not be strictly maintained. Certain property values on sweetgum were improved by the 3 %MC level, however.

The balance of moisture in the adhesive film was critical to joint performance and highly interrelated with material moisture content, spread rate, spreading surface, and closed assembly time. The ability of the adhesive to transfer, flow, and penetrate the opposite surface was dependent on moisture in the adhesive film.

Spread rate was highly significant in determining joint performance in most tests, and, of course, spread rate will be even more important because of its direct effect on costs of production. Of the three rates tested, the 65 lb/M ft^2 spread rate was near optimum. However, a spread rate approaching 50 lb/M ft^2 could produce acceptable property values if the material moisture content was near 6 percent, the veneer surface was spread with adhesive, and closed assembly time was near 10 minutes.

By spreading adhesive on the veneer surface rather than core edge, resistance to delamination and wet wood failure were improved significantly--primarily at the lowest 50 lb/M ft^2 spread rate. By spreading adhesive at the near optimum rate of 65 lb/M ft^2, the differences between spreading veneer or core became inconsequential.

Closed assembly time was marginally significant as a single main effect in dry shear strength and wood failure. However, assembly time had important interactions with moisture content of materials and spread rate. Generally these interactions pertained to the optimum balance of moisture in the adhesive film that could ensure effective transfer, flow, and penetration of adhesive on the opposite surface.

Literature Cited

American Institute of Timber Construction. Laminator's quality control system, AITC 201-83. In: Inspection Manual AITC 200-83. Englewood, CO; 1983:50-51.

American Society for Testing and Materials. Standard methods of evaluating the properties of wood-base and particle panel materials. ASTM D 1037-78. ASTM Stand., Part 22. Philadelphia, PA; 1982:310-311.

Koenigshof, Gerald A. Performance and quality-control standards for composite floor, wall, and truss framing. Gen. Tech. Rep. SE-33. Asheville, NC: U.S. Department of Agriculture, Forest Service, Southeastern Forest Experiment Station; 1985. 20 pp.

Pagel, Horst; Luckman, Edward R. Emulsion polymer isocyanate: a durable, water-based wood adhesive. Reprinted from Adhesives Age 24(10). Atlanta, GA: Communications Channels, Inc.; 1981. 6 pp.

Terbilcox, Thomas F.; Luckman, Edward R. How emulsion polymer/isocyanate adhesives solve bonding problems. RPN Technical Notebook, Emphasis on Adhesives/Sealants. Reprinted from Rubber & Plastic News. March 11, 1985. 4 pp.

Vick, Charles B. An emulsion polymer/isocyanate adhesive for laminating composite lumber. Forest Products Journal 34(9):27-34; 1984.

Vick, Charles B.

Lamination of hardwood composite framing with an emulsion polymer/isocyanate adhesive and radio-frequency curing. Res. Pap. SE-262. Asheville, NC: U.S. Department of Agriculture, Forest Service, Southeastern Forest Experiment Station; 1987. 13 pp.

Composite framing made from yellow-poplar and sweetgum parallel-laminated veneer and oriented flakeboard was effectively laminated with an emulsion polymer/isocyanate adhesive and radio-frequency curing at an assumed but typical range of material surface characteristics and factory assembly conditions.

KEYWORDS: Yellow-poplar, sweetgum, parallel-laminated veneer, oriented flakeboard, shear strength, wood failure, resistance to delamination.

Vick, Charles B.

Lamination of hardwood composite framing with an emulsion polymer/isocyanate adhesive and radio-frequency curing. Res. Pap. SE-262. Asheville, NC: U.S. Department of Agriculture, Forest Service, Southeastern Forest Experiment Station; 1987. 13 pp.

Composite framing made from yellow-poplar and sweetgum parallel-laminated veneer and oriented flakeboard was effectively laminated with an emulsion polymer/isocyanate adhesive and radio-frequency curing at an assumed but typical range of material surface characteristics and factory assembly conditions.

KEYWORDS: Yellow-poplar, sweetgum, parallel-laminated veneer, oriented flakeboard, shear strength, wood failure, resistance to delamination.

The Forest Service, U.S. Department of Agriculture, is dedicated to the principle of multiple use management of the Nation's forest resources for sustained yields of wood, water, forage, wildlife, and recreation. Through forestry research, cooperation with the States and private forest owners, and management of the National Forests and National Grasslands, it strives—as directed by Congress—to provide increasingly greater service to a growing Nation.

USDA policy does not permit discrimination because of race, color, national origin, sex or religion. Any person who believes he or she has been discriminated against in any USDA-related activity should write immediately to the Secretary of Agriculture, Washington, D.C. 20250.