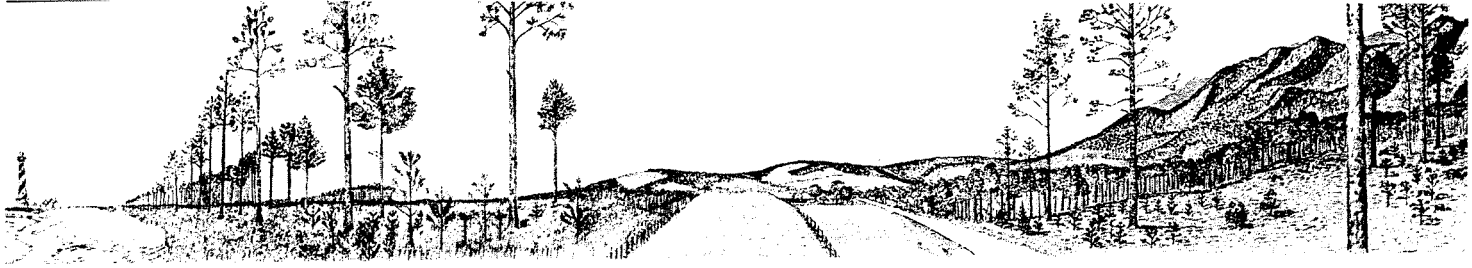

U. S. Forest Service Research Note SE-87 February 1968

A SMALL ELECTRIC WATER-LEVEL PROBE

Abstract.--Describes a device for determining water levels that is simple in design, well-suited to rough field work, and small enough to fit in a briefcase. Cost is about $10.

A simple, new electric probe has proved useful in determining water levels. Small enough to carry in a briefcase, it can operate in wells of various diameters. A novel feature is the coaxial cable which enables the probe to function in wells made of plastic or metal pipe.

The probe, an adaptation of the designs of Russell[1] and Luthin,[2] is a light, compact unit suited to rough field use. It consists of a coaxial cable attached to a pint-size, plastic refrigerator box containing a milliammeter, battery, switch, and two resistors (fig. 1). The cable is lowered into the well; when its tip touches the water surface, an electric circuit is completed and the current is registered by the ammeter. Depth to the water surface may then be read from graduations on the cable.

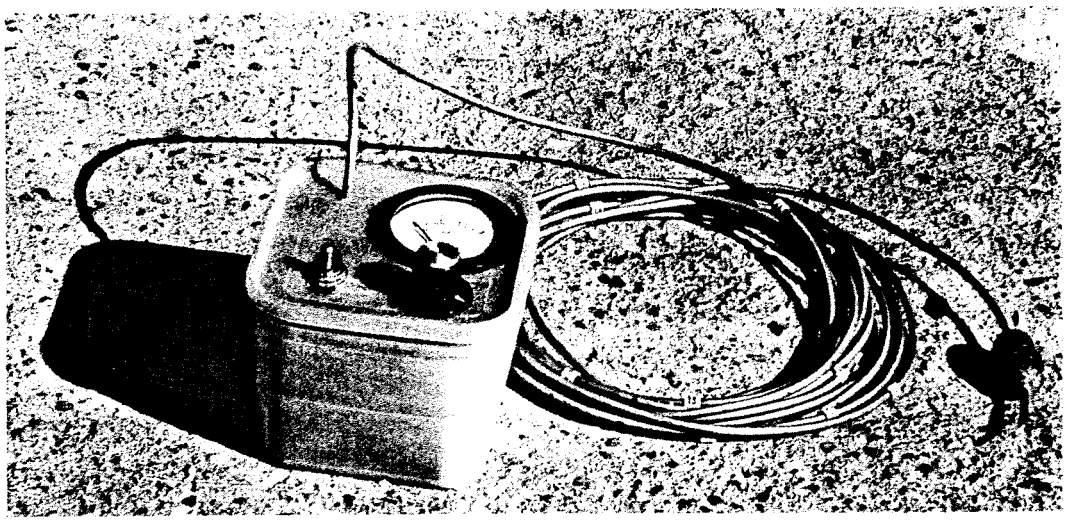

Figure 1.--The assembled probe.

[1] Russell, M. B. A probe for establishing the position of the water surface in standpipes. Amer. Soc. Agron. J. 37: 408. 1945.

[2] Luthin, James N. A reel-type electric probe for measuring water table elevations. Agron. J. 41: 584-585. 1949.

Southeastern Forest Experiment Station-Asheville, North Carolina

U.S. Department of Agriculture-Forest Service

The plastic cover, reinforced with a fitted piece of masonite on its underside, is strong enough to serve as a panel for the ammeter, variable resistor, and switch and to withstand jerks on the cable (fig. 2). A 2-inch cube of plastic sponge inserted in the container immobilizes the battery. The cable is marked at 1-foot intervals with numbered plastic tape. (For short cables, marks could be made with a felt pen.)

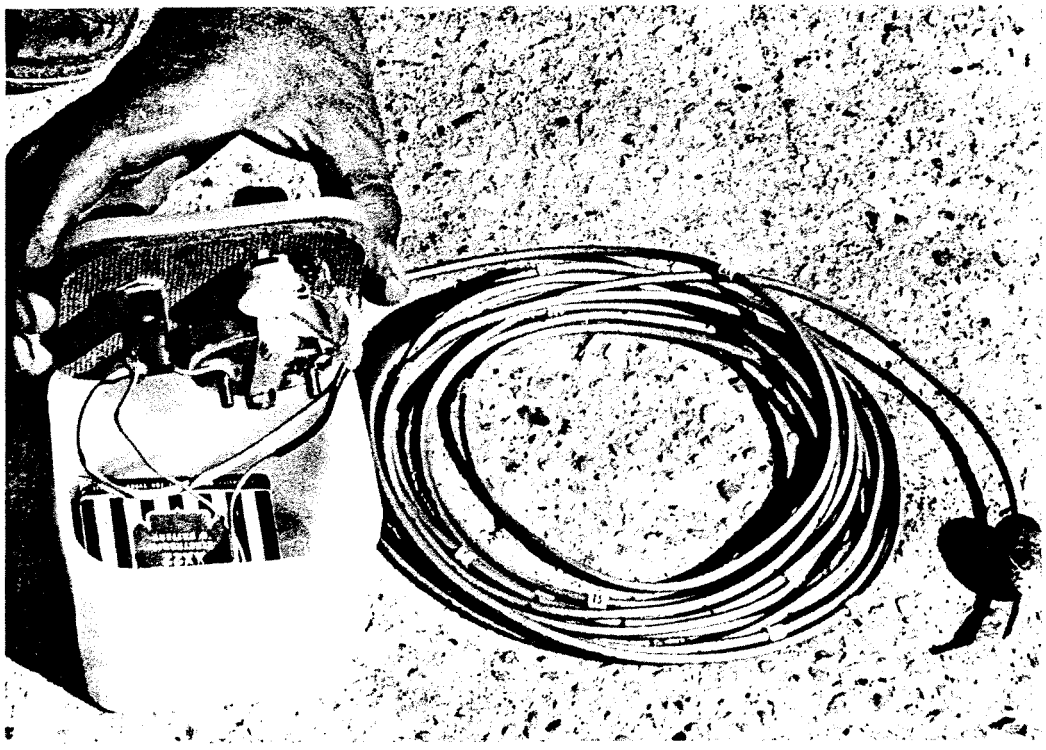

Figure 2.--Probe opened to show internal arrangement of parts.

The circuit is simple, incorporating a 33K ohm fixed resistor to protect the milliammeter and a 500K ohm potentiometer (variable resistor) to adjust current flow to the meter dial (fig. 3). The components of the probe are as follows:

Resistor, 33.2K ohms, 1/2 watt
Potentiometer, 500K ohms with knob
Milliammeter, 0-1 ma.
Cable, shielded Belden 8411[3]
Battery, 33-volt radio
Battery plug
Toggle switch (SPST) and switchplate
Plastic food container, 1 pint
Sinker, 3-ounce slip-lead

[3]Mention of a commercial product does not constitute an endorsement of such product by the Forest Service to the exclusion of other equally acceptable products.

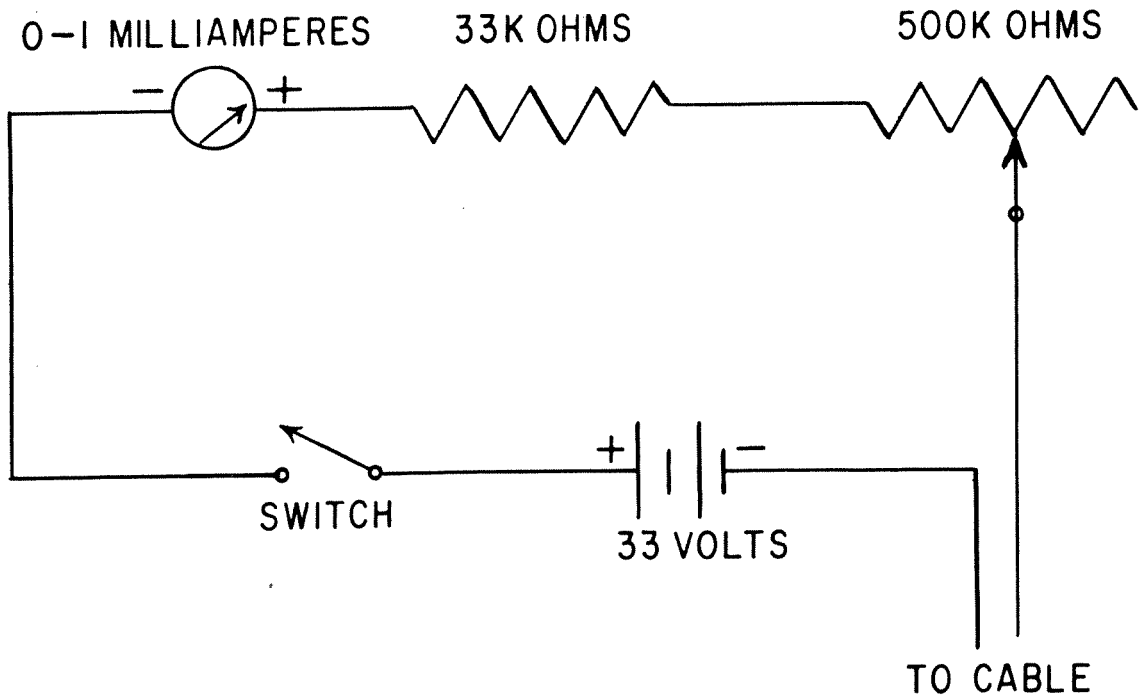

Figure 3.--Schematic diagram of the water level probe.

Once these parts have been obtained, the instrument can be constructed in an hour or two. Cost is approximately $10.

The outer-shielding conductor of the cable is cut about 3/8 inch shorter than the inner conductor to prevent an adhering drop of water from causing a false signal. For weight, a 3-ounce slip-lead sinker is fixed near the end of the cable with epoxy glue. Readings in small-diameter tubes would require a less bulky weight.

The cable must be calibrated for the portion of the access pipe extending above ground. With proper graduations depth to water can be read quite easily to 0.05 foot.

Edwin A. Hebb
Associate Soil Scientist
and
Robert D. McReynolds
Assistant Silviculturist

Marianna, Florida