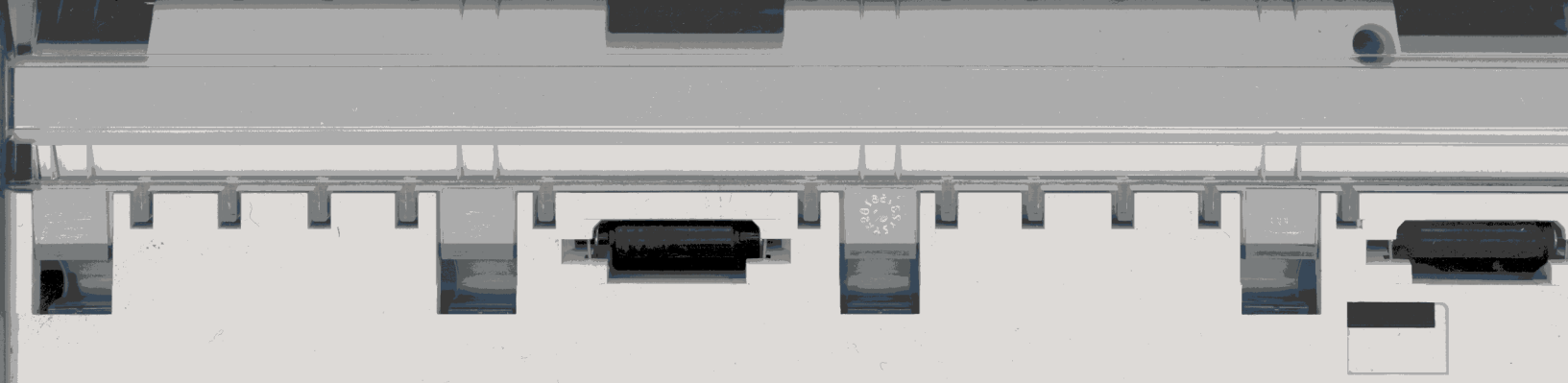

A MOBILE HARVESTER FOR UTILIZATION OF WEED TREES AND RESIDUES

Donald L. Sirois
Project Leader
Forest Engineering Research
Southern Forest Experiment Station
USDA, Forest Service
Auburn, AL 36849

Since the Arab oil embargo of 1973, wood has drawn an ever increasing interest as a source for energy and chemicals. This interest has stimulated research and development that is now beginning to produce results that, in turn, are creating a demand for more wood. Zerbe (1977) reported that, in addition to utilizing wood as an energy source, several companies are working on processes to convert lignin into phenols, used in the manufacture of waterproof wood adhesives. Possible process routes for wood are presented in Figure 1. Reference to an engineering economic study in a paper by Saeman (1977) indicates that for some of the routes in Figure 1 a variety of schemes or plant/product opportunities are possible for hydrolyzing wood into sugars. These sugars can be further converted to other products, although many of these are not economical, especially if produced by single-product factories. Economics can improve at multi-product plants producing ethanol, furfural, and phenol. The study concluded, however, that new processes are needed for the hydrolyzation of the cellulose of glucose. Until these processes are developed the direct conversion of wood to heat energy would remain the most cost effective means of utilizing woody biomass for improving our nation's energy position.

It is estimated that forest products are now contributing about 1.1 Quads (10^{16} BTUs) to the estimated 75 Quads of energy, about 1 ½%, of our national energy consumption (Youngs 1978). This imput includes energy from all forms of wood products and residues including such products as black liquor from the kraft pulping process. It is projected that the wood energy input could reach an annual level of up to 5.2 Quads in the relatively near future. But this would depend upon better utilization and more complete harvesting of portions of the forest resource such as weed trees and residues, now a disposal problem for landowners and forest managers. An important key to better use of available forest biomass will be the ability to economically harvest small weed trees—under 5-inches DBH—and forest residues. Presently these materials are left in the woods because harvesting cost exceeds their energy value using conventional harvesting equipment and systems. If the harvesting operation is unable to cover its cost, from the value of usable products, then other credits such as site preparation and stand improvement must be found. To be economical with present systems, an energy wood

Reprinted from the Proceedings of the 1981 John S. Wright Forestry Conference,
Weed Control in Forest Management, Purdue University,
West Lafayette, IN 47907.

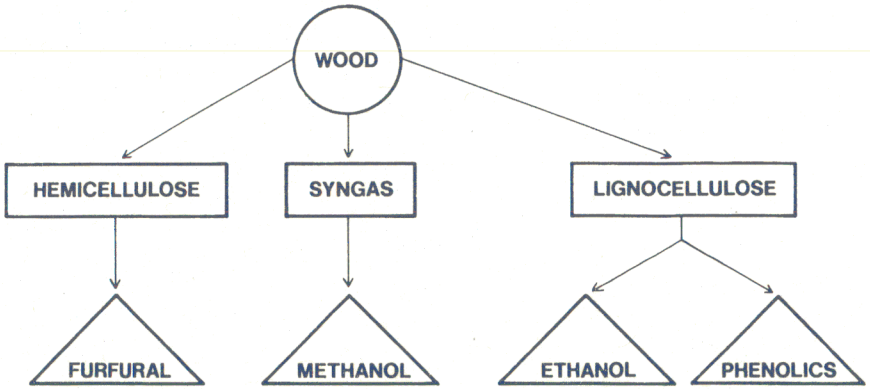

Figure 1. Possible routes for production of chemicals from wood.

harvesting operation must be in stands that include large trees (Klunder 1979).

Development of new harvesting equipment and systems such as high speed shears, disk fellers, and mobile chipper harvesters may reduce harvesting cost while making it possible to harvest the under-utilized small wood and residues resources.

Stand Characteristics

Understocked stands with abundant low-value hardwoods have been increasing in the southeast by an estimated 1 million acres per year. These were predominately harvested pine stands that are not being regenerated. The results are stands of over-stocked mixed hardwoods with little or no commercial value. Such stands generally contain naturally-regenerated pine, large cull-hardwoods, and logging slash.

Depending upon the stand characteristics before harvest and utilization levels, the remaining forest biomass—live, dead, and downed material—can range from a few tons to more than 45 tons per acre. Figures 2 and 3 show what I consider to be the typical range of conditions for natural pine/hardwood stands in the Piedmont 2 years after final harvest. These stands contain sufficient biomass to justify harvesting; however, harvesting would not be economical with conventional systems because of the large components of small and downed trees and tree pieces that include tops. A breakdown of the residues on sites I and II are given in Table 1.

As an example, data from small trees on commercial forest lands in the state of Georgia (Butts and Druid 1979) are presented in Table 2. These data should be representative of forest conditions in other southern states and are indicative of the weed-tree/residual problem. They also show the potential

Figure 2. Site I, 21 tons per acre.

Figure 3. Site II, 36 tons per acre.

Table 1. Major woody biomass components for Sites I and II in tons/acre (green).

Site	Diameter Class-inches	Hardwood Standing	Hardwood Downed	Hardwood Pieces	Pine Standing	Pine Downed	Pine Pieces
I	1-2	.3	1.9	2.5	0	.7	1.3
	3-4	4.0	1.0	0	0	1.0	1.7
	5-6	0	1.8	0	0	0	0
	>6	4.7		0	0	0	0
Site total	20.9	9.0	4.7	2.5	0	1.7	3.0
II	1-2	4.4	.1	.9	.4	0	2.3
	3-4	5.8	1.3	1.0	0	1.1	.3
	5-6	4.8	0	0	0	0	0
	>6	14.0	0	0	0	0	0
Site Total	36.4	29.0	1.4	1.9	.4	1.1	2.6

for additional wood recovery from the forest resource. Assuming that it would be desirable, and possible, to harvest those trees not before considered as growing stock, then there would be about 2 million cubic feet of additional wood for energy and chemicals in the state of Georgia. Another benefit from harvesting small trees would be a reduction in treatment for weed-tree control. If economical harvesting systems are found, small trees also would provide an additional source of income for the forest landowner while reducing his costs for site preparation, hazard reduction, and possibly TSI.

Possible Harvesting Systems

Although many different types of machines and systems are available to the timber harvester, I believe that it is reasonable to say that only a few systems show any real promise for harvesting weed trees and residues. These are all based on field chipping; however, one exception should be noted. Stuart and Walbridge (1978) are presently working on a baling concept for logging residues as an alternative to chipping in the field. Once this concept is developed, there does not appear to be any reason why a baler could not be integrated into a harvesting system for small trees and residues. The advantages projected for the baling system are lower initial investment cost, $30,000-$50,000, compared to $130,000 for a representative portable chipper (1978 prices), and ease of transporation of the densely compacted woody materials.

There are four basic categories of machines for in-woods chipping around which harvesting systems for small trees, weed trees, and residue can be built. None of these will meet all needs, and one or more may prove infeasible because of economics or other factors. The four basic machines are:

1. *Portable Chipper*—Chippers in this category are mounted on a trailer frame and are designed to be moved onto a landing and set up. The wood is felled and skidded to the chipper for processing. The chipper is generally

Table 2. Volume of small trees on commercial forest lands in Georgia.[1] (Taken from Butts and Preston 1979).

Species	All live trees[2] 1	2	3	4	Growing stock[3] 1	2	3	4
	----Diameter (Inches)[4]----				----Diameter (Inches)[4]----			
	------Thousand cubic feet------				------Thousand cubic feet------			
Pine	122,863	389,415	746,917	1,059,308	103,881	351,427	703,807	1,005,585
Other softwoods	14,908	23,494	32,092	39,140	12,970	21,635	29,049	33,678
Total softwoods	137,771	412,909	779,009	1,098,448	116,851	373,062	732,856	1,039,263
Soft hardwoods	279,948	405,197	514,011	611,357	124,204	235,505	324,508	440,214
Hard hardwoods	284,334	446,245	530,060	585,952	71,001	162,860	245,504	296,574
Total hardwoods	564,282	851,442	1,044,071	1,197,309	195,205	398,365	570,012	736,788
Total all species	702,053	1,264,351	1,823,080	2,295,757	312,056	771,427	1,302,868	1,776,051

[1]Southeastern Forest Experiment Station, USFS.
[2]All live trees includes desirable and acceptable trees of commercial species, as well as rough and rotten trees, and trees of non-commercial species.
[3]Growing stock includes desirable and acceptable trees of commercial species.
[4]Diameter class range is full inch through .9 inch, measured 4½ feet above ground.

equiped for self-loading and has a mechanical infeed. Chips are discharged into a chip van or may be discharged on the landing for storage. Machines in this category are represented by units such as the Morbark[1] "Total Chip Harvest," Nicholson "Complete Tree Utilizer," Precision "Tree Harvester," and other similar machines.

2. *Mobile Chipper Forwarder*—This category of machine is based on the concept of a self-loading chipper, with or without a mechanical infeed that is mounted on a rubber tired or tracked carrier. Being mounted on its own carrier, it is "mobile" and free to move over the forest terrain to the wood and is therefore independent of skidders and forwarders. However, the chipper forwarder is dependent on a feller-buncher for felling. Chips from the chipper are discharged into an onboard container. When the container is full, the mobile chipper forwarder travels back to the landing or other discharge point for self unloading of the chips. Machines in this category are represented by the Tyovaline Oy "TT 1000 F Terrain Chipper," Bruks "800 CT," and the Purcell Brothers prototype chipper forwarder (tracked unit).

3. *Mobile Chip Harvester*—This category of machines is based on the concept of the chipper mounted on a rubber tired or tracked carrier with an integral device for clear felling trees and brush in a continuous swath. Infeed to the chipper is assisted by the felling device and possibly by a separate mechanical infeed system. Chips are discharged into a second vehicle for forwarding to the landing or other unloading-point. Machines in this category are represented by the Nicholson "Mobile Harvester" and the Pallari "Brusharvester" prototypes.

4. *Mobile Chip Harvester Forwarder*—This category of machine is capable of performing all of the in-woods chip harvesting functions. The machines consist of a chipper mounted on a tracked or wheeled carrier that has an integral device for clear felling small trees and brush in a continuous swath. It also has an onboard provision for collecting the chips discharged from the chipper for forwarding to the landing or other unloading point. Machines representative of this category are the Georgia Pacific "Brush Harvester (Jaws III)" and the Pallari "Brusharvester," when equipped with special chip collectors; both are prototypes.

Other harvesting system concepts may be devised for harvesting weed and small trees and forest residues, but at the present time systems built around these machines show the greatest potential. As with most machines each of these has characteristics that impose limitations on their applications. Both portable chippers and the mobile chipper forwarders rely on other machines in the systems for felling and presenting trees as a group or bunch for chipping. These fuctions could be accomplished by a number of means ranging from manual chainsaw felling and stacking to highly mechanized accumulating feller-bunchers. When applying either of these systems to harvesting cutover stands containing large trees as well as small weed trees

[1]Use of trade, firm, or corporation names is for the reader's information and convenience. Such use does not constitute official endorsement or approval by the U.S. Department of Agriculture of any product or service to be the exclusion of others that may be suitable.

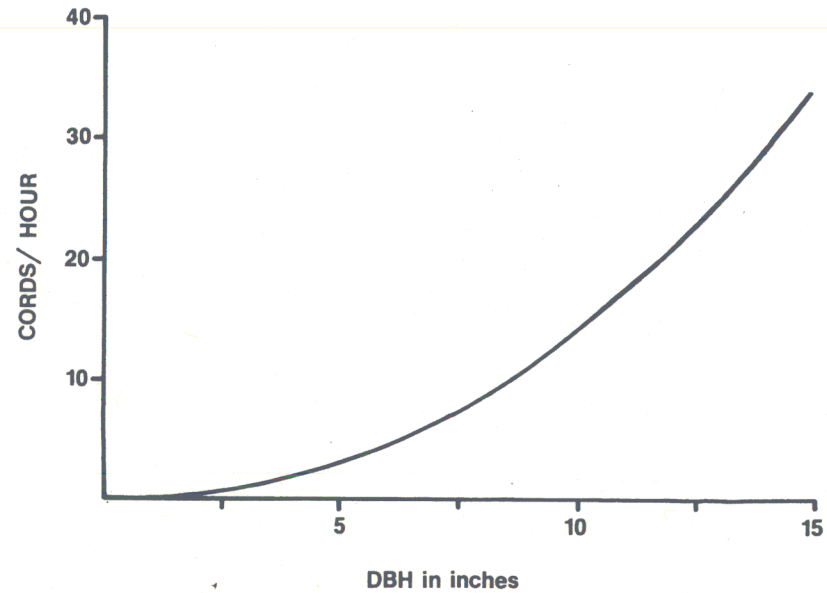

Figure 4. Feller buncher production vs. tree size.

and residues, it will generally be necessary to use a chipper capable of handling wood up to at least 16 inches in diameter.

Chippers rated as being able to chip 18-inch and 22-inch material are capable of processing up to 120 cords of wood per day. To obtain levels of production in this range requires the use of feller-bunchers. Most feller-bunchers available today are capable of cutting only one tree at a time, even though it may be capable of accumulating two or more trees, depending on size, before dropping its load. On an average, with few exceptions, feller-bunchers can fell and bunch only two to three trees per minute even with accumulation. This creates production and cost problems when harvesting stands with a high percentage of their volume in small diameter trees. Figure 4 shows the effect of tree size on production using an average feller-buncher capability of two trees per minute. Kluender and Plummer (1980) have translated this diameter affect into production cost. In their example, they considered a balanced whole tree portable chipping system consisting of 2 feller-bunchers, 2 grapple skidders, 1 portable whole tree chipper, 4 trucks, 8 chip vans, and the normal support equipment. The costs in the example shown in Table 3 are realistic, though not actual, and fully demonstrate the small tree harvesting problem. The cost example assumes delivery of field run chips to a mill 30 miles from the harvesting site, but does not include cost of wood. For comparison with the Table 3 values the average price of whole tree chips for fuel delivered to a boiler site in Rome, Georgia, during October 1980 was $16.32 per ton (Shirley and Mixon 1980). The tree size/cost relationship can be further demonstrated in Figure 5. Here the cost is seen in-

Table 3. Illustrative harvesting and transporation cost of whole tree chips versus tree size. (Taken from Klunder and Plummer 1980).

Tree size DBH inches	Cost per ton (green) Dollars	Cost per cord[1] Dollars
1	107.31	289.74
2	53.91	154.56
3	24.80	66.96
4	15.37	41.50
5	11.20	30.24
6	8.32	23.81
7	7.35	19.84
8	6.82	18.41
9	6.35	17.14
10	6.13	16.55
11	6.00	16.20

[1]Based on green weight of 5,400 pounds per cord.

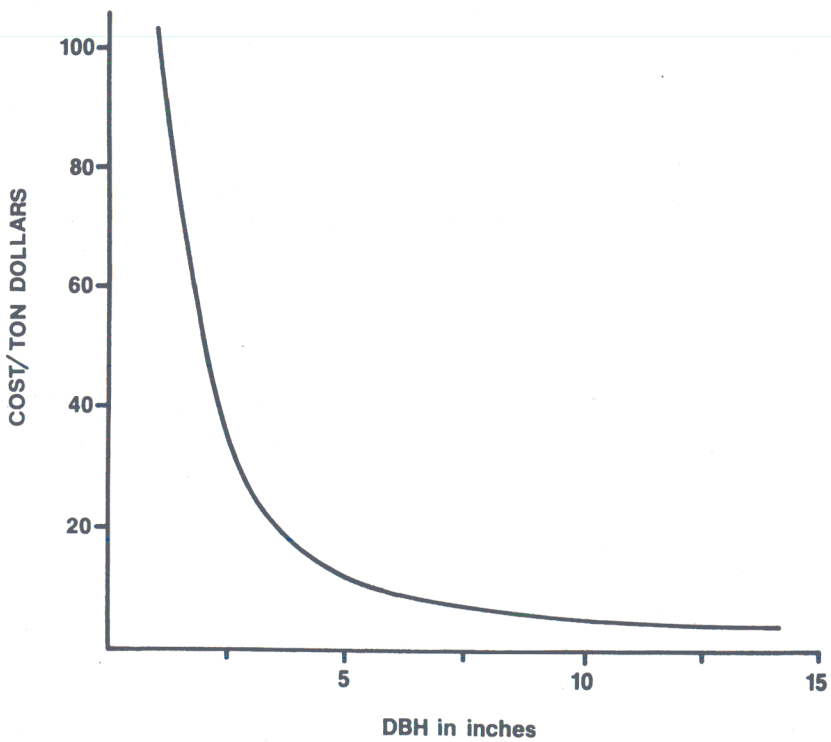

Figure 5. Harvesting and transportation cost vs. tree size.

creasing exponentially with decreasing tree size. This condition is aggravated by the use of larger feller-bunchers capable of handling only one stem at a time—the curve would rise sooner and become steeper. To overcome the effect of rapidly increasing harvesting cost with decreasing tree size, it is necessary to use machines capable of felling more than one tree at a time or at least not having to stop moving during the felling operation. Machines capable of this are generally classified as swath fellers. While other cutting methods may be feasible, all of the present machines (all prototypes) use either one or two large horizontal disks or a large diameter horizontal cylinder with cutters mounted on their periphery. Machines of these types are capable of greatly exceeding the average production rate for accumulating feller-bunchers of two trees per minute. A swath feller as used on a mobile chip harvester working in a dense doghair stand of small trees, 2500 trees per acre, should be able to fell 42 trees per minute with a production rate of one acre per hour. It is this type of capability that has stimulated development of swath fellers.

In addition to being able to fell trees at a high rate, the swath fellers, using the horizontal cylindrical felling concept, also have the ability to pick up a portion of downed trees and other forest residues. This is the concept used on the Nicholson-Koch prototype mobile chip harvester that is now under study by the Forest Service engineering research project at Auburn, Alabama.

Mobile Chip Harvester Development

Development of the Nicholson-Koch Mobile Chip Harvester is the result of a request for proposals by Dr. Peter Koch in 1976 for the Forest Service, Department of Energy, and five forest products companies with operations in the southeastern United States. Reasons for interest in this development by various parties included the need to harvest additional wood for fiber and fuel, site preparation, and stand improvement work. It was possible to take these needs and the stand characteristics and terrain conditions of the southeast and blend them into a firm set of operational criteria for machine development. Five manufacturers presented proposals, with Nicholson Manufacturing receiving the most favorable acceptance. This acceptance has led to the construction of their prototype mobile chip harvester.

Some of the principal criteria for the development were:

- While traveling at a rate of one mile per hour be able to fell trees of the major southern hardwood species measuring up to 12-inches in diameter at a 6-inch stump height.
- Clear fell a complete swath 110-inches wide.
- Be capable of routinely feeding and chipping previously felled trees up to 19-inches in diameter.
- Without stopping, pick up logging slash and chip it.
- Design the machine to permit an average travel/work speed to one mile per hour over sites containing 25 tons of green above-ground biomass while felling, feeding, and chipping this material. The average production rate

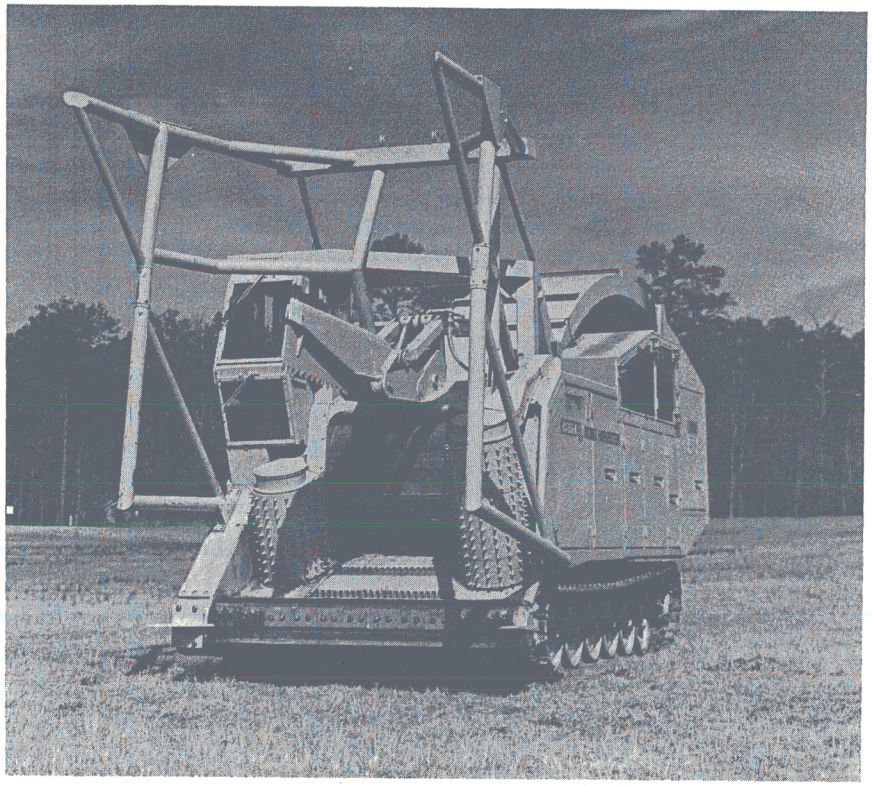

Figure 6. The Nicholson-Koch Mobile Chip Harvester.

is to be one acre per hour with a biomass harvesting efficiency of 85% or more.

- Machine ground pressure is to be less than 12 psi.

The machine shown in Figure 6 is the result of the Nicholson effort to meet the design criteria. The chassis for the Harvester is a modified FMC skidder frame that was lengthened to permit an extra set of road wheels. This modification provided additional space for components and increased the track area while reducing ground pressure. With a gross weight of approximately 73,000 pounds, the ground pressure is 10.7 psi. The dimensions of the Mobile Chip Harvester are about: length—32 feet 10 inches; width—9 feet 5 inches; and height—15 feet. For transporting over roads, some of the structures—front mounted collector frame and chip discharge chute—can be folded down to reduce the height to 12 feet 6 inches.

To accomplish the swath felling of trees and the recovery of residues, the machine is equipped with a cylindrical feller-collector bar (felling bar) at the front of the machine. The felling bar is fabricated from heavy steel plate and provides for mounting of four cutter knives that extend over the full 93.5 in-

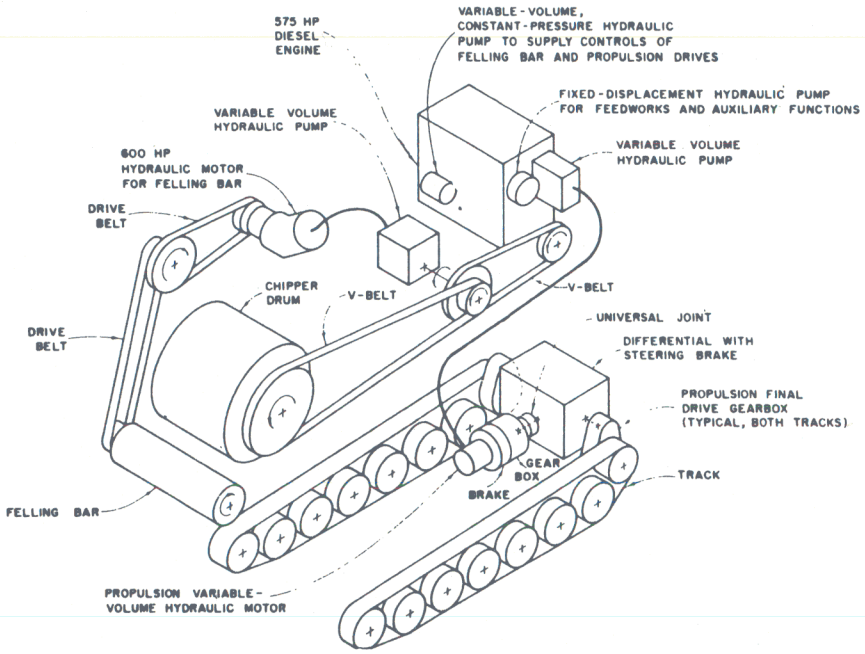

Figure 7. Schematic diagram of the Mobile Chip Harvesters' major driven components and related power trains (taken from Koch and Savage 1980).

ches of felling bar length. The knives are each made up of 11 knife segments that are fixed to the felling bar by two caps screws. This design provides for ease of removal and replacement of the knives for sharpening. This is important since the felling bar works close to the ground—adjustable from 2- to 7-inches above the ground level. The felling bar has a cutting diameter of about 16.5-inches. In addition to felling standing trees, the felling bar acts as a collector for picking up downed materials and aids feeding of the chipper.

For chipping, the Mobile Chip Harvester is equipped with a 48-inch diameter straight drum chipper that is nearly 47 inches wide. The chipper uses three knives that are also made up of short segments, six per knife, to facilitate changing in the field. By using a rake angle of 52.5 degrees for the knives and beveling the cutting edge to 31 degrees, the chipper is self-feeding once chipping starts. To assist with initial infeed, the harvester is equipped with vertical side rolls and a set of bottom feed rolls between the felling bar and chipper.

A schematic presentation of the major Harvester operating components and power train is shown in Figure 7. All primary power from the 575 HP Cummins diesel engine, except that to the chipper, is transmitted through hydrostatic transmissions. Use of the hydrostatic drives permits control of speeds over a continuous and wide range; they also allow reversing capability. Banded Vee belt drives are used in the final drive for the felling bar, and for

the chipper to provide better overall physical arrangement and efficiency of power transmission.

Following construction and some initial testing by Nicholson, the Harvester was shipped to Auburn, Alabama in early 1980 for field testing under southern forest conditions. These tests were cut short as a result of a fire on the machine. Repairs have been made, and the tests are continuing. Although all of the planned tests were not completed during 1980, we were able to become familiar with the machine's operating characteristics and to identify some needed modifications. In addition to evaluating the machine, a study was also installed to begin assessment of site preparation treatments and loss of nutrients following nearly complete biomass harvest (Gordon, Miller and Brewer 1980).

The test we completed during 1980 at Auburn did not cover the complete range of conditions necessary to fully evaluate the Harvester against all of the design criteria. This will be done during 1981. Our conditions did indicate several areas where modifications were desirable to improve overall performance. The modifications would:

1. Provide more aggressive feeding of material into the chipper by the mechanical feed rolls and provide for self cleaning of the lower rolls.
2. Provide a device (cable or elastic member) for applying pressure to large trees during cutting with the felling bar to assist directional felling by the machine for improved chipping.
3. Modify grind angle on chipper knives to improve self feeding, and improve clamping of the knives.
4. Modify the felling bar drive belt system to increase belt life.
5. Reposition the operator's seat for better visibility and comfort, and simplify the controls.
6. Add an onboard fire suppression system.

Nicholson Manfacturing has made all of the above modifications. So, for 1981 we will be working with a greatly improved machine that has advanced past the first prototype stage. The next series of tests will be directed toward collection of data for production, mechanical availability, and fuel usage. Depending upon these tests results, the project could move into the testing of the Harvester with a chip forwarder. The chip forwarder design criteria have not been established at this time, but we envision the machine to be a tracked vehicle similar to the Harvester with a self unloading chip container. A complete system will probably include at least two forwarders so that the Harvester can be fully utilized. The forwarder would not be necessary if the only interest is site preparation or TSI without recovery of chips.

Early Study Results

Since we are working with a prototype machine that has undergone changes during the test period, it is only possible to report the data as representing the machine's capabilities as a "snapshot" during the developmental process.

As mentioned earlier we were not able to test the machine under all planned

conditions; however, we did have a range that included harvesting large trees as well as small ones. During these tests it was found that the Harvester's felling bar is capable of felling large pine, up to 18-inches in DBH. However, this practice is not recommended because of the high peak horsepowers that can exceed 600 HP. Loads such as these can result in premature drive system failures. Additional data is needed, but we feel that by using banded Vee belts in the final drive to the felling bar, limiting the depth of cut by the knives, and staying within the design criteria that component life will be at an acceptable level. It was demonstrated during the test that the present felling bar not only did a good job of felling both small and large trees, but it also performed well by picking up downed material and assisted with feeding it into the chipper.

The three-knive, straight drum chipper designed by Nicholson for the Harvester is capable of high production. The present power unit and drive system appear adequate. Additional data including horsepower input will be collected. Tests using branch-free logs have indicated average chipper feed rates of 163 ft/min. for pines and 154 ft/min. for hardwoods over the range of 8- to 11-inches DBH. Feed rates for large pine, up to 12-inches DBH, during field chipping with top intact averaged 124 ft/min. All trees up to 10-inches DBH with small crowns fed well.

Chip quality is generally good in the ¾ to 1-¼ inch size range and may be acceptable for fiber in addition to use as energy wood. Pine chips are more uniform in shape than are hardwood chips. Sample screen analysis for chips from mixed pines and hardwoods collected during normal Harvester operations are shown in Table 4. The green (fresh) weight of the chips averaged 22.2 lbs/ft.^{3} with an average moisture content of 95%. The measure inputs came from weighing the volumes of chips in one-cubic-foot boxes placed on the bottom of a trailer pulled behind the Harvester.

Machine production data were collected on one test plot containing a stand consisting mostly of small residual pines averaging 6-inches DBH. The total biomas over 1-inch in diameter for the plot was 25.6 tons/acre (green weight). The terrain conditions were near-zero slope and firm soil—no soft or boggy areas. The average production rate for this plot was one acre per hour. After harvest, biomas remaining on the site was sampled and calculated to be

Table 4. Average size of chips produced by the Mobile Chip Harvester.

Screen size inches	Percent by weight retained on screen Average[1]	Range
< ½	26	8-50
½	22.5	13-29
¾	14.4	6-20
1	14.4	5-21
1¼	6.6	3-14
1½	8.4	3-14
>2	7.7	4-24

[1]Average of 23 samples

six tons per acre. This was divided almost equally between chipped and unchipped material. Based on these values, the Harvester was able to harvest 19.6 tons of woody biomass, for a recovery rate of 76%. Subjectively the condition of the test site appeared to be clean enough to be planted without further site preparation.

One of the test sites cleared by the Harvester and from which chips were removed was selected to assess surface disturbance and nutrient-loss impacts and the potential for site preparation. Study results for site disturbance showed that 32% of the 2.5 acre site was significantly compacted and that the litter zone was increased because of unharvested chips (Gordon, Miller and Brewer 1980). The same study showed that treatments with Tordon 10K and Velpar Gridballs controlled hardwood resprouting in the first growing season by 89% for Tordon and 36% for Velpar. The herbicide treatments increased nutrient losses of Ca, NO_3-N, SO_4-S, and HCO_3-C over that for the chipped-only plots during the first 5 months after treatment. The herbicide treatments resulted in no acceleration in the loss of Mg, K, and PO_4.

Summary

Although the potential is growing for the use of small weed trees and residues for energy and other products, the high harvesting cost associated with small diameter trees presently is a barrier. Mobile chip harvesters now under development and capable of swath felling could be the key to the future utilization of the small tree biomass resource. The prototype of the Nicholson-Koch Mobile Chip Harvester that uses a large diameter horizontal cylindrical felling bar concept is also capable of felling large trees and of picking up downed material without stopping. This additional capability appears desirable from the standpoint of complete harvesting of the above ground forest biomass. Additional production and machine availability data are still needed for the Harvester and chip forwarders, as a system, before a true economic assessment can be made. Site preparation and TSI benefits may be applicable credits against harvesting cost. Additional studies should also be conducted to determine the site impacts due to nearly complete harvest of the forest biomass and subsequent treatments.

Literature Cited

Butts, Paul M. and Druid N. Preston. 1979. "Whole tree chipping a forest management tool." Georgia Forest Research Paper No. 4. June 1979, 8 p.

Gordon, Robert, James Miller, and Conrad Brewer. 1980. "Assessment of site preparation treatments and nutrient loss following complete harvest using the Nicholson-Koch Mobile Chipper." ed. James P. Barnett. First Biennial Southern Silvicultural Research Conference, Atlanta, GA. In press.

Klunder, Richard A. 1979. "The forest: a source of fuel in the paper industry." Presented paper at the Paper Industry Managerial Association Meeting June 15, 1979, San Francisco, CA (APA paper 79-P-15) 6 p.

Klunder, Richard and Glenn Plummer. 1980. "Whole tree chipping for fuel: the range of diameter limits." APA Report 80-A-19, August 1980, 6 p.

Koch, Peter and Thomas E. Savage. 1980. "Development of the swath-felling mobile chipper," *Journal of Forestry* 1:17-21.

Saeman, Jerome F. 1977. "Energy and materials from the forest biomass," presented paper at the Symposium on Clean Fuels from Biomass and Wastes, Orlando, FL, January 25-28, 1977.

Shirley, A. Ray and John W. Mixon. 1980. "Wood energy in Georgia," report by Georgia Forestry Commission. October 1980, 13 p.

Stuart, W. B. and T. A. Walbridge. 1978. "A new approach to harvesting, transporting, and storing logging residues," 6th Annual Hardwood Symposium, May 3-6, 1978, Cashiers, NC, p. 74-83.

Youngs, Robert L. 1978. "Utilization of hardwoods for energy," 6th Annual Hardwood Symposium. p. 95-96. In: Proceedings of the Hardwood Research Council, May 3-6, 1978.

Zerbe, John I. 1977. "Wood in the energy crisis." *Forest Farmer.*